RIGOL

Performance Verification Manual

DP1308A

Programmable Linear DC Power Supply

Feb. 2014
RIGOL Technologies, Inc.

Guaranty and Declaration

Copyright

Trademark Information

RIGOL is a registered trademark of RIGOL Technologies, Inc.

Publication Number

PVH01102-1110

Notices

- **RIGOL** products are protected by patent law in and outside of P.R.C.
- **RIGOL** reserves the right to modify or change parts of or all the specifications and pricing policies at company's sole decision.
- Information in this publication replaces all previously corresponding material.
- **RIGOL** shall not be liable for losses caused by either incidental or consequential in connection with the furnishing, use or performance of this manual as well as any information contained.
- Any part of this document is forbidden to be copied or photocopied or rearranged without prior written approval of **RIGOL**.

Product Certification

RIGOL guarantees this product conforms to the national and industrial standards in China as well as the ISO9001:2008 standard and the ISO14001:2004 standard. Other international standard conformance certification is in progress.

Contact Us

If you have any problem or requirement when using our products or this manual, please contact **RIGOL**.

E-mail: service@rigol.com
Website: www.rigol.com

General Safety Summary

Please review the following safety precautions carefully before putting the instrument into operation so as to avoid any personal injuries or damages to the instrument and any product connected to it. To prevent potential hazards, please use the instrument only specified by this manual.

Use Proper Power Cord.

Only the power cord designed for the instrument and authorized for use within the local country could be used.

Ground The Instrument.

The instrument is grounded through the Protective Earth lead of the power cord. To avoid electric shock, it is essential to connect the earth terminal of power cord to the Protective Earth terminal before any inputs or outputs.

Connect the Probe Correctly.

If a probe is used, do not connect the ground lead to high voltage since it has the isobaric electric potential as ground.

Observe All Terminal Ratings.

To avoid fire or shock hazard, observe all ratings and markers on the instrument and check your manual for more information about ratings before connecting.

Use Proper Overvoltage Protection.

Make sure that no overvoltage (such as that caused by a thunderstorm) can reach the product, or else the operator might expose to danger of electrical shock.

Do Not Operate Without Covers.

Do not operate the instrument with covers or panels removed.

Do Not Insert Anything into the Holes of Fan.

Do not insert anything into the holes of the fan to avoid damaging the instrument.

Use Proper Fuse.

Please use the specified fuses.

Avoid Circuit or Wire Exposure.

Do not touch exposed junctions and components when the unit is powered.

Do Not Operate With Suspected Failures.

If you suspect damage occurs to the instrument, have it inspected by qualified service personnel before further operations. Any maintenance, adjustment or replacement especially to circuits or accessories must be performed by **RIGOL** authorized personnel.

Keep Well Ventilation.

Inadequate ventilation may cause increasing of temperature or damages to the device. So please keep well ventilated and inspect the intake and fan regularly.

Do Not Operate in Wet Conditions.

In order to avoid short circuiting to the interior of the device or electric shock, please do not operate in a humid environment.

Do Not Operate in an Explosive Atmosphere.

In order to avoid damages to the device or personal injuries, it is important to operate the device away from an explosive atmosphere.

Keep Product Surfaces Clean and Dry.

To avoid the influence of dust and/or moisture in air, please keep the surface of device clean and dry.

Electrostatic Prevention.

Operate in an electrostatic discharge protective area environment to avoid damages induced by static discharges. Always ground both the internal and external conductors of the cable to release static before connecting.

Proper Use of Battery.

If a battery is supplied, it must not be exposed to high temperature or in contact with fire. Keep it out of the reach of children. Improper change of battery (note: lithium battery) may cause explosion. Use **RIGOL** specified battery only.

Handling Safety.

Please handle with care during transportation to avoid damages to buttons, knob interfaces and other parts on the panels.

Do Not Provide Power for the Active Load.

In order to avoid the anti-irrigation current which leads to the power control loop out of control and damages the powered device, this power supply can only provide power for the pure load without the current output function.

Allgemeine Sicherheits Informationen

Überprüfen Sie diefolgenden Sicherheitshinweise sorgfältigumPersonenschädenoderSchäden am Gerätundan damit verbundenen weiteren Gerätenzu vermeiden. Zur Vermeidung vonGefahren, nutzen Sie bitte das Gerät nur so, wiein diesem Handbuchangegeben.

Um Feuer oder Verletzungen zu vermeiden, verwenden Sie ein ordnungsgemäßes Netzkabel.
Verwenden Sie für dieses Gerät nur das für ihr Land zugelassene und genehmigte Netzkabel.

Erden des Gerätes.
Das Gerät ist durch den Schutzleiter im Netzkabel geerdet. Um Gefahren durch elektrischen Schlag zu vermeiden, ist es unerlässlich, die Erdung durchzuführen. Erst dann dürfen weitere Ein- oder Ausgänge verbunden werden.

Anschluss einesTastkopfes.
Die Erdungsklemmen der Sonden sindauf dem gleichen Spannungspegel des Instruments geerdet. SchließenSie die Erdungsklemmen an keine hohe Spannung an.

Beachten Sie alle Anschlüsse.
Zur Vermeidung von Feuer oder Stromschlag, beachten Sie alle Bemerkungen und Markierungen auf dem Instrument. Befolgen Sie die Bedienungsanleitung für weitere Informationen, bevor Sie weitere Anschlüsse an das Instrument legen.

Verwenden Sie einen geeigneten Überspannungsschutz.
Stellen Sie sicher, daß keinerlei Überspannung (wie z.B. durch Gewitter verursacht) das Gerät erreichen kann. Andernfallsbestehtfür den Anwender die GefahreinesStromschlages.

Nicht ohne Abdeckung einschalten.
Betreiben Sie das Gerät nicht mit entfernten Gehäuse-Abdeckungen.

Betreiben Sie das Gerät nicht geöffnet.
Der Betrieb mit offenen oder entfernten Gehäuseteilen ist nicht zulässig. Nichts in entsprechende Öffnungen stecken (Lüfter z.B.)

Passende Sicherung verwenden.
Setzen Sie nur die spezifikationsgemäßen Sicherungen ein.

Vermeiden Sie ungeschützte Verbindungen.
Berühren Sie keine unisolierten Verbindungen oder Baugruppen, während das Gerät in Betrieb ist.

Betreiben Sie das Gerät nicht im Fehlerfall.

Wenn Sie am Gerät einen Defekt vermuten, sorgen Sie dafür, bevor Sie das Gerät wieder betreiben, dass eine Untersuchung durch qualifiziertes Kundendienstpersonal durchgeführt wird.Jedwede Wartung, Einstellarbeiten oder Austausch von Teilen am Gerät, sowie am Zubehör dürfen nur von **RIGOL** autorisiertem Personal durchgeführt werden.

Belüftung sicherstellen.

Unzureichende Belüftung kann zu Temperaturanstiegen und somit zu thermischen Schäden am Gerät führen. Stellen Sie deswegen die Belüftung sicher und kontrollieren regelmäßig Lüfter und Belüftungsöffnungen.

Nicht in feuchter Umgebung betreiben.

Zur Vermeidung von Kurzschluß im Geräteinneren und Stromschlag betreiben Sie das Gerät bitte niemals in feuchter Umgebung.

Nicht in explosiver Atmosphäre betreiben.

Zur Vermeidung von Personen- und Sachschäden ist es unumgänglich, das Gerät ausschließlich fernab jedweder explosiven Atmosphäre zu betreiben.

Geräteoberflächen sauber und trocken halten.

Um den Einfluß von Staub und Feuchtigkeit aus der Luft auszuschließen, halten Sie bitte die Geräteoberflächen sauber und trocken.

Schutz gegen elektrostatische Entladung (ESD).

Sorgen Sie für eine elektrostatisch geschützte Umgebung, um somit Schäden und Funktionsstörungen durch ESD zu vermeiden. Erden Sie vor dem Anschluß immer Innen- und Außenleiter der Verbindungsleitung, um statische Aufladung zu entladen.

Die richtige Verwendung desAkku.

Wenneine Batterieverwendet wird, vermeiden Sie hohe Temperaturen bzw. Feuer ausgesetzt werden.Bewahren Sie es außerhalbder Reichweitevon Kindern auf.UnsachgemäßeÄnderung derBatterie(Anmerkung:Lithium-Batterie)kann zu einer Explosion führen. VerwendenSie nur von RIGOLangegebenenAkkus.

Sicherer Transport.

Transportieren Sie das Gerät sorgfältig (Verpackung!), um Schäden an Bedienelementen, Anschlüssen und anderen Teilen zu vermeiden.

Vermeiden Sie das einprägen von Strom und Spannung an den Testklemmen.

Das DP800 Power Supply kann hierdurch zerstört werden, keine akive Last. Das DP800 kann nur Strom und Spannungen leifern.

Document Overview

DP1308A is a high-performance programmable linear DC power supply with 80W triple outputs (+6V/5A, +25V/1A and -25V/1A). This manual introduces the DP1308A performance verification procedures which verify that DP1308A is operating normally and is within published specifications.

Main topics of this manual:

Chapter 1 Test Preparations

This chapter introduces the test preparations as well as the recommended test devices.

Chapter 2 Constant Voltage Tests

This chapter introduces the specification test methods of DP1308A under CV (constant voltage) mode.

Chapter 3 Constant Current Tests

This chapter introduces the specification test methods of DP1308A under CC (constant current) mode.

Appendix

A test result record form and DP1308A performance specifications are provided.

Contents

Chapter 1 Test Preparations

This chapter introduces the test preparations as well as the recommended test devices.

Topics of this chapter:

- Self-test and Warm-up
- Recommended Test Devices
- Voltage and Current Values
- Test Result Record

Self-test and Warm-up

Make the following preparations before performance verification:

1. Perform self-test to make sure that the instrument can work normally;
2. Warm the instrument up for at least 30 minutes.

Self-test

Connect the instrument to AC power using the power cord provided with the accessories. Turn on the power switch at the rear panel; then press the power key at the front panel; the instrument starts and performs self-test. If the instrument passes the self-test, the user interface is displayed; otherwise, the self-test error prompt message is displayed.

You can press **Utility** → → **SelfTest** → **Test** to perform self-test after the instrument starts.

If the self-test fails, make sure that the problems are found and solved and the instrument passes the self-test before performing the performance verification test.

Warm-up

Warm the instrument up for at least 30 minutes before performing the performance verification test.

Recommended Test Devices

Please use the recommended test devices in Table 1-1 to test the performance specifications of DP1308A. If these devices are not present, use devices that fulfill the "Performance Requirement" in the table below instead.

Table 1-1 Recommended Test Devices

Instrument	Performance Requirement	Recommended Instrument
Digital Oscilloscope	Bandwidth: ≥100 MHz Minimum Vertical Scale: ≤2mV Bandwidth Limit: ≥20MHz	**RIGOL** DS1102E
Digital Multimeter	Reading Resolution: 6 ½ bit	**RIGOL** DM3068 Agilent 3458A Agilent 34411A
RMS Voltmeter	Sensitivity: 1mV Bandwidth: ≥10MHz	Agilent 3400A Agilent 3458A
Programmable Electronic Load	300W	Agilent 6060B
AC Source	Adjustment Rate >1%	Agilent 6811B
Current Monitoring Resistor	0.1Ω (Accuracy: 0.1%, Thermal Drift: 10ppm)	——

Voltage and Current Values

During the test, the voltage and current of the output channel of the power supply should be set to the specified values. Table 1-2 lists the rated output values and maximum output values of the voltage and current of each channel.

Table 1-2 Voltage and current values of each channel of DP1308A

Channel	Rated Output Voltage	Max Output Voltage	Rated Output Current	Max Output Current
+6V/5A	+6 V	+6.3 V	5 A	5.25A
+25V/1A	+25 V	+26.25 V	1 A	1.05A
-25V/1A	-25 V	-26.25 V	1 A	1.05A

Test Result Record

Record and keep the test result of each test item. A test result record form which provides all the test items and their corresponding performance specification limits as well as spaces for users to record the test results, is provided in **Appendix**.

Tip:
RIGOL recommends that you photocopy the test results record form before each test and record the test results on the copies so that this form can be used repeatedly.

Chapter 2 Constant Voltage Tests

This chapter introduces how to test the specifications of DP1308A under CV mode.

Topics of this chapter:

- Preparation
- CV Load Adjustment Rate (CV Load Effect)
- CV Linear Adjustment Rate (CV Source Effect)
- CV Ripple and Noise
- Transient Response Time
- CV Programming and Readback Accuracy

Preparation

The main parameters of DP1308A requiring test under constant voltage include constant voltage load adjustment rate, constant voltage linear adjustment rate, ripple and noise, transient response time as well as programming and readback accuracy.

Before the test, select the appropriate voltage (for the voltages supported by DP1308A, refer to Table 2-1) via the “voltage selector” at the rear panel of the power supply according to the AC line voltage of your nation. Connect the device recommended in **Recommended Test Devices** according to the figure below under normal temperature (about 25℃). During the test, set the voltage of the AC source according to the voltage selected.

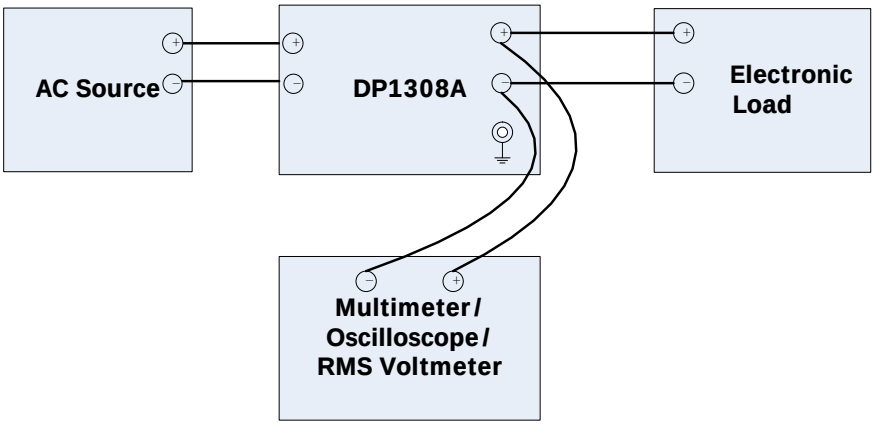

Figure 2-1 Test Connection (CV)

Table 2-1 AC line voltages supported by DP1308A

Voltage	100VAC	115VAC	220VAC	230VAC
Undervoltage	90VAC	104VAC	242VAC	253VAC
Overvoltage	110VAC	127VAC	198VAC	207VAC

CV Load Adjustment Rate (CV Load Effect)

CV load adjustment rate, a static specification, is used to test the output voltage variation of the power supply caused by the load effect under constant voltage (CV).

During the measurement, the measurement error caused by the output terminal should be taken into consideration. Figure 2-2 is the schematic diagram of the output terminal of the power supply. As the output terminal is metallic conductor and has a certain contact resistance Δr, when the output current of the power supply is I, the terminal voltage is $Ve = \Delta r \times I$. Therefore, the voltage test point is generally located at **A** to reduce the error caused by the terminal voltage. Besides, the contact resistance generated by this terminal and the power output line and voltage feedback line inside the instrument would cause an offset (U_{offset}) of less than 2mV.

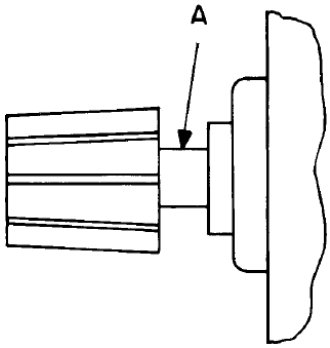

Figure 2-2 Output Terminal

Assume that the power supply currently works in CV mode, the output voltage for no load is U_0 and for full load is U_1, the load adjustment rate is defined as:

$$\text{Load Adjustment Rate} = \frac{|U_1 - U_0 - U_{offset}|}{\text{Rated Output Voltage}} \times 100\% \qquad (2\text{-}1)$$

1. Turn off DP1308A. Connect DP1308A, AC source, electronic load and multimeter according to Figure 2-1. Note that the measurement probe or clip of the multimeter must be connected to **A** in Figure 2-2.

2. Turn on the AC source and set its voltage to the AC line voltage.

3. Turn on DP1308A. Press **+6V**, **+25V** or **-25V** at the front panel to select the channel to be tested. Set the voltage and current of the channel to be tested according to Table 2-2. Press **On/Off** under the channel to be tested to enable power output.

4. Turn on the eletronic load and set the electronic load current to 0A or do not connect any load device (no load).

5. Turn on the multimeter and select DCV (DC voltage) measurement function. The output status of the power supply should be CV. Read and record the current reading U_0 on the multimeter.

6. Set the electronic load for the output channel's rated current. The output status of the power supply should be CV and record the reading U_1 on the multimeter.

7. Calculate $\frac{|U_1 - U_0 - U_{offset}|}{\text{Rated Output Voltage}} \times 100\%$ to get the measurement result of load adjustment rate. Wherein, U_{offset} (about 2mV) is the offset caused by error.

8. Compare the measurement result with the specification in "Appendix B: Specifications". The measurement result should be no greater than 0.01%.

9. Repeat steps 1 to 8 to test the CV load adjustment rates of the other two output channels.

Table 2-2 Setting and specification of CV load adjustment rate test

Channel	+6V/5A	+25V/1A	-25V/1A
Voltage (V)	6	25	-25
Current (A)	5.25	1.05	1.05
Specification	<0.01%+2mV		

CV Linear Adjustment Rate (CV Source Effect)

CV linear adjustment rate is used to measure the variation of output voltage of the power supply due to source effect under constant voltage (CV).

1. Turn off DP1308A. Connect DP1308A, AC source, electronic load and multimeter according to Figure 2-1. Note that the measurement probe or clip of the multimeter must be connected to **A** in Figure 2-2.

2. Turn on the AC source and set its voltage to the AC line voltage.

3. Turn on DP1308A and press **+6V**, **+25V** or **-25V** at the front panel to select the channel to be tested. Set the voltage and current of the channel to be tested according to Table 2-3. Press **On/Off** under the channel to be tested to enable power output.

4. Turn on the electronic load and set the electronic load for the output channel's rated current.

5. Turn on the multimeter and select DCV measurement function. The output status of the power supply should be CV. Read and record the current reading U_0 on the multimeter.

6. Adjust the AC source to undervoltage state (namely 10% drop in amplitude, refer to Table 2-1). The output status of the power supply should be CV. Read and record the current reading U_1 on the multimeter.

7. Adjust the AC source to overvoltage state (namely 10% rise in amplitude, refer to Table 2-1). The output status of the power supply should be CV. Read and record the current reading U_2 on the multimeter.

8. Calculate $\frac{|U_1 - U_0 - U_{offset}|}{U_0} \times 100\%$ and $\frac{|U_2 - U_0 - U_{offset}|}{U_0} \times 100\%$ respectively to get the measurement results of load adjustment rate. Wherein, U_{offset} (about 2mV) is the offset caused by error.

9. Compare the measurement results with the specification in “Appendix B: Specifications”. The measurement results should be no greater than 0.01%.

10. Repeat steps 1 to 9 to test the CV linear adjustment rates of the other two output channels.

Table 2-3 Setting and specification of CV linear adjustment rate test

Channel	+6V/5A	+25V/1A	-25V/1A
Voltage (V)	6	25	-25
Current (A)	5.25	1.05	1.05
Specification	<0.01%+2mV		

CV Ripple and Noise

Periodic and random deviations (PARD) in the output combine to produce a residual AC voltage superimposed on the DC output voltage when the power supply is operating in CV mode. This residual voltage, namely the ripple and noise (usually, ripple is periodic offset while noise is random offset) is specified as the RMS or peak-to-peak noise.

1. Turn off DP1308A. Connect DP1308A, AC source, resistive load (1.2Ω for +6V/5A channel; 25Ω for +25V/1A and -25V/1A channels) and oscilloscope according to Figure 2-1 (connect the positive terminal of the oscilloscope probe to the positive terminal of the output channel of the power supply and the ground terminal to the negative terminal. Note: you'd better use ground spring as ground wire so as to minimize the current coupling area between the probe tip and the ground wire and to minimize the space radiation interference).

Note:

- Do not connect the negative terminal of the output terminal to the shielding ground; otherwise, a ground loop would be formed. The A connection in Figure 2-3 forms a ground loop while B connection is correct.
- Use resistive load instead of electronic load to avoid affecting the noise measurement of the power supply by the electronic load noise.

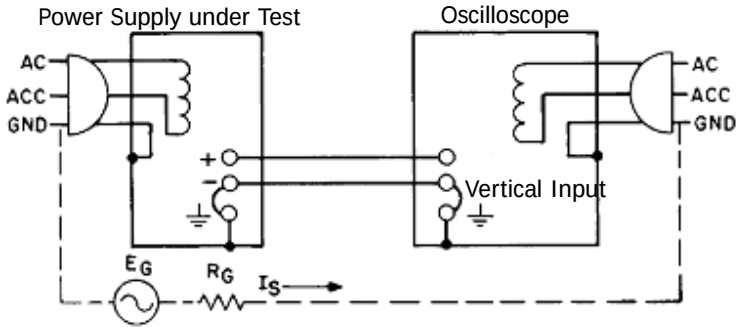

A. Wrong Connection

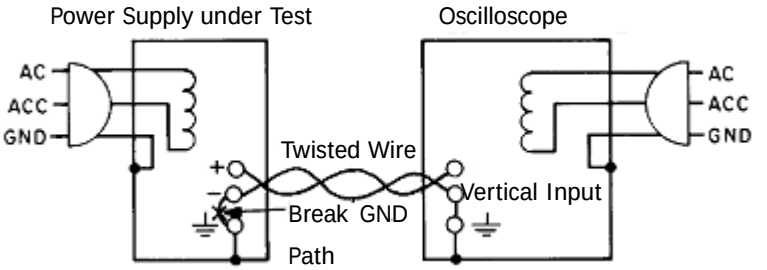

B. Correct Connection

Figure 2-3 Peak-to-Peak Value Measurement Connection

2. Turn on the AC source and set its voltage to the AC line voltage.

3. Turn on DP1308A and press **+6V**, **+25V** or **-25V** at the front panel to select the channel to be tested. Set the voltage of the channel to be tested to the rated output value and the current to the maximum output value according to Table 2-4. Press **On/Off** under the channel to be tested to enable power output.

4. Set the time base, vertical scale and sampling mode of the oscilloscope to 5ms/div, 2mV and peak detect respectively. Set the oscilloscope to AC coupling mode with 1MΩ termination and turn on the 20MHz bandwidth limit. Enable the peak-to-peak measurement function of the oscilloscope. The output status of the power supply should be CV. Read and record the peak-to-peak value (Vpp) measured by the oscilloscope.

5. Disconnect the oscilloscope and connect the RMS voltmeter as shown in Figure 2-1. Note that the measurement wires of the voltmeter should be twisted together to minimize the effect of the space radiation noise on the test. The output status of the power supply should be CV. Read and record the Vrms measured.

6. Compare the measurement results with the specification in “Appendix B: Specifications”.

7. Repeat steps 1 to 6 to test the CV ripple and noise of the other two output channels.

Table 2-4 Setting and specification of CV ripple and noise test

Channel	+6V/5A	+25V/1A	-25V/1A
Voltage (V)	6	25	-25
Current (A)	5.25	1.05	1.05
Specification	<350 uVrms/2 mVpp		

Transient Response Time

Transient response time refers to the time for the output voltage to recover to within 15mV following a 50% change in the load current. As shown in Figure 2-4, **t** is the transient response time.

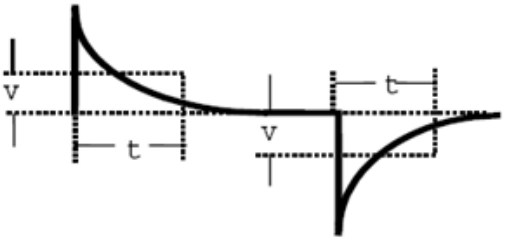

Figure 2-4 Transient Response Time

1. Turn off DP1308A. Connect DP1308A, AC source, electronic load and oscilloscope according to Figure 2-1.

2. Turn on the AC source and set its voltage to the AC line voltage.

3. Turn on DP1308A and press **+6V**, **+25V** or **-25V** at the front panel to select the channel to be tested. Set the voltage and current of the channel to be tested according to Table 2-5. Press **On/Off** under the channel to be tested to enable power output.

4. Make sure that the programmable electronic load is working in CC mode and set its parameters:
   transient operation mode; rising edge and falling edge time: 250mA/us; frequency: 1kHz; duty cycle: 50%; two current values (according to Table 2-5): High Level (the rated output current of the channel under test) and Low Level (the half load current of the channel under test). Turn on the electronic load.

5. Set the oscilloscope to AC coupling mode. Measure the value of **t** on the oscilloscope and compare it with the specification in “Appendix B: Specifications”.

6. Repeat steps 1 to 5 to test the transient response time of the other two output channels.

Table 2-5 Setting and specification of transient response time test

Channel	+6V/5A	+25V/1A	-25V/1A
Voltage (V)	6	25	-25
Current (A)	5.25	1.05	1.05
Electronic Load Current (A)	High Level: 5	High Level: 1	High Level: 1
	Low Level: 2.5	Low Level: 0.5	Low Level: 0.5
Specification	<50μs		

CV Programming and Readback Accuracy

Programming accuracy and readback accuracy verify the high accuracy and programmable performance of the power supply.

1. Turn off DP1308A. Connect DP1308A, AC source and multimeter according to Figure 3-1.

2. Turn on the AC source and set its voltage to the AC line voltage.

3. Measure the CV programming accuracy and readback accuracy under 0V voltage.
   1) Turn on DP1308A. Execute the following operations via the remote interface (USB, LAN or GPIB):
      Send command to select the channel to be tested and set its voltage and current (according to the Table 2-6):
      APPLy P6V,0,5.25 (for +6V/5A channel)
      APPLy P25V,0,1.05 (for +25V/1A channel)
      APPLy N25V,0,1.05 (for -25V/1A channel)
      Send the **OUTPut:STATe {P6V|P25V|N25V},ON** command to enable the output of the channel to be tested.
   2) Turn the multimeter on and select DCV measurement function. The output status of the power supply should be CV. Read and record the current reading U_1 on the multimeter.
   3) Send the **MEASure:VOLTage? {P6V|P25V|N25V}** command via the remote interface (USB, LAN or GPIB) to read and record the voltage U_2.
   4) Calculate the programming accuracy $|U_1-0|$;
      Calculate the readback accuracy $|U_2-0|$.
   5) Compare the measurement results with the specifications in “Appendix B: Specifications”.

Table 2-6 Setting and specification of CV programming and readback accuracy test (0V voltage)

Channel	+6V/5A	+25V/1A	-25V/1A
Voltage (V)	0	0	0
Current (A)	5.25	1.05	1.05
Specification	Programming: 0.5mV Readback: 0.5mV	Programming: 1.5mV Readback: 1.5mV	

4. Measure the CV programming accuracy and readback accuracy under rated output voltage.

   1) Turn on DP1308A. Execute the following operations via the remote interface (USB, LAN or GPIB):
      Send command to select the channel to be tested and set its voltage and current (according to the Table 2-7):
      APPLy P6V,6,5.25 (for +6V/5A channel)
      APPLy P25V,25,1.05 (for +25V/1A channel)
      APPLy N25V,-25,1.05 (for -25V/1A channel)
      Send the **OUTPut:STATe {P6V|P25V|N25V},ON** command to enable the output of the channel to be tested.
   2) The output status of the power supply should be CV. Read and record the measurement value U_3 on the multimeter.
   3) Send the **MEASure:VOLTage? {P6V|P25V|N25V}** command via the remote interface (USB, LAN or GPIB) to read and record the voltage U_4.
   4) Calculate the programming accuracy: |U_3-rated output voltage of the channel under test|;
      Calculate the readback accuracy: |U_4-rated output voltage of the channel under test|.
   5) Compare the measurement results with the specifications in “Appendix B: Specifications”.

Table 2-7 Setting and specification of CV programming and readback accuracy test (rated output voltage)

Channel	+6V/5A	+25V/1A	-25V/1A
Voltage (V)	6	25	-25
Current (A)	5.25	1.05	1.05
Specification	Programming: 0.5mV Readback: 0.5mV	Programming: 1.5mV Readback: 1.5mV	

5. Repeat Steps 1 to 4 to test the CV programming and feedback accuracy of the other two output channels.

Chapter 3 Constant Current Tests

This chapter introduces how to measure the specifications of the power supply under CC mode.

Topics of this chapter:

- Preparation
- CC Load Adjustment Rate (CC Load Effect)
- CC Linear Adjustment Rate (CC Source Effect)
- CC Ripple and Noise (Normal Mode)
- CC Programming and Readback Accuracy

Preparation

The main parameters of the power supply requiring test under constant current include constant current load adjustment rate, constant current linear adjustment rate, ripple and noise as well as programming and readback accuracy.

Connect the devices recommended in **Recommended Test Devices** according to the figure below under normal temperature (about 25℃). Note that a current monitoring resistor (R=0.1Ω) should be connected between the power supply under test and the electronic load serially to convert the current signal under test to voltage signal for the measurement of related parameters.

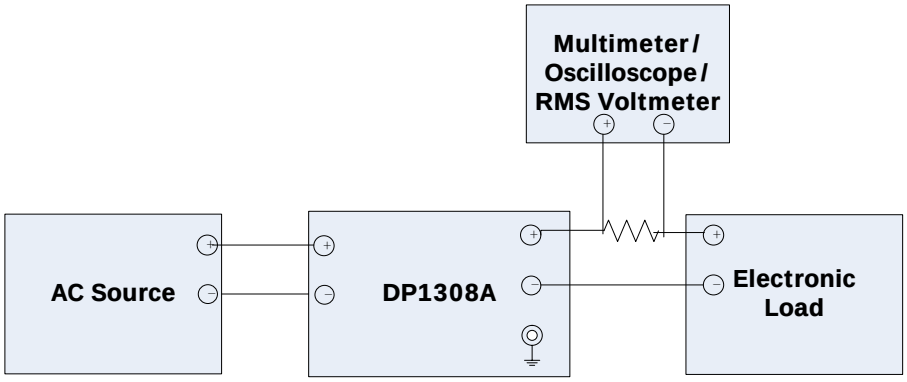

Figure 3-1 Test connection (CC)

CC Load Adjustment Rate (CC Load Effect)

CC load adjustment rate, a static specification, is used to test the output current variation of the power supply caused by load effect under constant current (CC).

1. Turn off DP1308A. Connect DP1308A, AC source, current monitoring resistor, electronic load and multimeter according to Figure 3-1. Note that 0.1Ω 4-wire current monitoring resistor should be used and the multimeter should be connected to the voltage measurement terminal of the current monitoring resistor (as shown in the figure below, C represents the current measurement terminals and S represents the voltage measurement terminals).

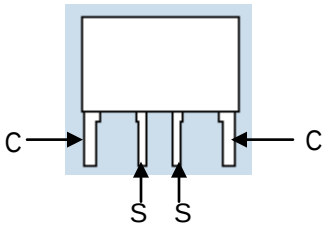

Figure 3-2 4-wire Current Monitoring Resistor

2. Turn on the AC source and set its voltage to the AC line voltage. Set the electronic load to short-circuit mode and the output status of the power supply channel under test should be CC.

3. Turn on DP1308A and press **+6V**, **+25V** or **-25V** at the front panel to select the channel to be tested. Set the voltage and current of the channel to be tested according to Table 3-1. Press **On/Off** under the channel to be tested to enable power output.

4. Turn on the multimeter and select DCV measurement function. The output status of the power supply should be CC. Read the reading U_0 (namely the voltage of the current monitoring resistor) on the multimeter and calculate the short-circuit current U_0/R.

5. Set the electronic load to CV mode and adjsut its voltage to approximately the rated output voltage of the channel under test. At this point, the output status of

the power supply should still be CC and the output should be approximately full-load output. Read the reading U_1 (namely the voltage of the current monitoring resistor) on the multimeter and calculate the full load current U_1/R.

6. Calculate the CC load adjsutment rate: $\frac{|U_1/R - U_0/R - I_{offset}|}{\text{Rated Output Current}} \times 100\%$, wherein, I_{offset} (about 250 uA) is the offset caused by error.

7. Compare the measurement result with the specification in “Appendix B: Specifications”.

8. Repeat steps 1 to 7 to test the CC load adjustment rates of the other two output channels.

Table 3-1 Setting and specification of CC load adjustment rate test

Channel	+6V/5A	+25V/1A	-25V/1A
Voltage (V)	6.3	26.25	-26.25
Current (A)	5	1	1
Specification	<0.01%+250uA		

CC Linear Adjustment Rate (CC Source Effect)

CC linear adjustment rate is used to measure the variation of output current of the power supply due to source effect under constant current (CC).

1. Turn off DP1308A. Connect DP1308A, AC source, current monitoring resistor, electronic load and multimeter according to Figure 3-1. Note that the measurement probe or clip of the multimeter must be connected to **A** in Figure 2-2.

2. Turn on the AC source and set its voltage to the AC line voltage.

3. Turn on DP1308A and press **+6V**, **+25V** or **-25V** at the front panel to select the channel to be tested. Set the voltage and current of the channel to be tested according to Table 3-2. Press **On/Off** under the channel to be tested to enable power output.

4. Turn on the electronic load and set it to CV mode. Set its voltage to approximately the rated output voltage of the channel under test and the output status of the power supply channel under test should be CC.

5. Turn on the multimeter and select DCV measurement function. Read and record the current reading U_0 on the multimeter and calculate the current U_0/R.

6. Adjust the AC source to undervoltage state (namely 10% drop in amplitude, refer to Table 2-1). Read and record the current reading U_1 on the multimeter and calculate the current U_1/R.

7. Adjust the AC source to overvoltage state (namely 10% rise in amplitude, refer to Table 2-1). Read and record the current reading U_2 on the multimeter and calculate the current U_2/R.

8. Calculate $\frac{|U_1/R-U_0/R-I_{offset}|}{U_0/R}\times 100\%$ and $\frac{|U_2/R-U_0/R-I_{offset}|}{U_0/R}\times 100\%$ respectively to get the measurement results of load adjustment rate. Wherein, I_{offset} (about 250 uA) is the offset caused by error.

9. Compare the measurement results with the specification in “Appendix B: Specifications”.

10. Repeat steps 1 to 9 to test the CC linear adjustment rates of the other two output channels.

Table 3-2 Setting and specification of CC linear adjustment rate test

Channel	+6V/5A	+25V/1A	-25V/1A
Voltage (V)	6.3	26.25	-26.25
Current (A)	5	1	1
Electronic Load Voltage (V)	6	25	-25
Specification	<0.01%+250uA		

CC Ripple and Noise (Normal Mode)

Current ripple and noise is usually specified as RMS.

1. Turn off DP1308A. Connect DP1308A and AC source according to Figure 3-1. Note that in order to eliminate the noise introduced by the electronic load, use resistive load (1.2Ω for +6V/5A channel; 25Ω for +25V/1A and -25V/1A channels) to replace the electronic load in Figure 3-1. Then connect the RMS voltmeter across the resistive load.

2. Turn on the AC source and set its voltage to the AC line voltage.

3. Turn on DP1308A and press **+6V**, **+25V** or **-25V** at the front panel to select the channel to be tested. Set the voltage and current of the channel under test according to Table 3-3. Press **On/Off** under the channel to be tested to enable power output.

4. Turn on the RMS voltmeter. The output status of the power supply should be CC. Measure the RMS voltage V_{rms} on the load resistor and calculate the RMS of the current V_{rms} /R.

5. Compare the measurement value with the specifications in “Appendix B: specifications”.

6. Repeat steps 1 to 5 to test the CC ripple and noise of the other two output channels.

Table 3-3 Setting and specification of CC ripple and noise test

Channel	+6V/5A	+25V/1A	-25V/1A
Voltage (V)	6.3	26.25	-26.25
Current (A)	5	1	1
Specification (Normal Mode)	<2 mArms	<500 uArms	

CC Programming and Readback Accuracy

Programming accuracy and readback accuracy verify the high accuracy and programmable performance of the power supply.

1. Turn off DP1308A. Connect DP1308A, AC source, current monitoring resistor (0.1Ω) and multimeter.

2. Turn on the AC source and set its voltage to the AC line voltage.

3. Measure the programming accuracy and readback accuracy under 0A current.
   1) Turn on DP1308A. Execute the following operations via the remote interface (USB, LAN or GPIB):
      Send command to select the channel to be tested and set its voltage and current (according to the Table 3-4):
      APPLy P6V,5,0 (for +6V/5A channel)
      APPLy P25V,5,0 (for +25V/1A channel)
      APPLy N25V,-5,0 (for -25V/1A channel)
      Send the **OUTPut:STATe {P6V|P25V|N25V},ON** command to enable the output of the channel to be tested.
   2) Turn on the multimeter and select DCV measurement function. The output status of the power supply should be CC. Read and record the current reading U_1 on the multimeter and calculate the current $I_1=U_1/R$.
   3) Send the **MEASure:CURRent? {P6V|P25V|N25V}** command via the remote interface (USB, LAN or GPIB) to read and record the current I_2.
   4) Calculate the programming accuracy: $|I_1-0|$;
      calculate the readback accuracy: $|I_2-0|$.
   5) Compare the measurement results with the specifications in “Appendix B: Specifications”.

Table 3-4 Setting and specification of CC programming and readback accuracy test (0A current)

Channel	+6V/5A	+25V/1A	-25V/1A
Voltage (V)	5	5	-5
Current (A)	0	0	0
Specification	Programming: 0.5mA Readback: 0.5mA	Programming: 0.1mA Readback: 0.1mA	

4. Measure the programming accuracy and readback accuracy under rated output current.

   1) Turn on DP1308A. Execute the following operations via the remote interface (USB, LAN or GPIB):
      Send command to select the channel to be tested and set its voltage and current of the channel to be tested (according to the Table 3-5):
      APPLy P6V,5,5 (for +6V/5A channel)
      APPLy P25V,5,1 (for +25V/1A channel)
      APPLy N25V,-5,1 (for -25V/1A channel)
      Send the **OUTPut:STATe {P6V|P25V|N25V},ON** command to enable the output of the channel to be tested.
   2) Keep the electronic load in short-circuit mode and the output status of the power supply should be CC. Read and record the measurement value U_3 on the multimeter. Calculate the current $I_3=U_3/R$.
   3) Send the **MEASure:CURRent? {P6V|P25V|N25V}** command via the remote interface (USB, LAN or GPIB) to read and record the current I_4.
   4) Calculate the programming accuracy: $|I_3$-rated output current of the channel under test$|$;
      Calculate the readback accuracy: $|I_4$- rated output current of the channel under test$|$.
   5) Compare the measurement results with the specifications in “Appendix B: Specifications”.

Table 3-5 Setting and specification of CC programming and readback accuracy test (rated output current)

Channel	+6V/5A	-25V/1A	+25V/1A
Voltage (V)	5	5	-5
Current (A)	5	1	1
Specification	Programming: 0.5mA Readback: 0.5mA	Programming: 0.1mA Readback: 0.1mA	

5. Repeat steps 1 to 4 to test the CC programming accuracy and readback accuracy of the other two output channels.

Appendix

Appendix A: Test Result Record Form

Performance Verification Test Record Form for **RIGOL** DP1308A

Tested by: _____ Date: _____

	+6V/5A Channel	+25V/1A Channel	-25V/1A Channel
CV Load Adjustment Rate			
Specification	<0.01%+2mV		
Output Voltage (No Load) U_0			
Output Voltage (Full Load) U_1			
Calculation Result			
CV Linear Adjustment Rate			
Specification	<0.01%+2mV		
Output Voltage (Undervoltage) U_0			
Output Voltage (Overvoltage) U_1			
Calculation Result			
CV Ripple and Noise			
Specification	<350uVrms/2mVpp		
Peak-to-Peak **Vpp**			
RMS **Vrms**			
Transient Response Time			
Specification	The time for the output voltage to recover to within 15mV following the current change from full load to half load or from half load to full load		

	should be lower than 50μs.		
Measurement Result **t**			
CV Programming and Readback Accuracy			
Programming			
Specification	0. 5mV	1.5mV	
Measurement Result (0V)			
Measurement Result (Rated Voltage)			
Readback			
Specification	0.5mV	1.5mV	
Measurement Result (0V)			
Measurement Result (Rated Voltage)			
CC Load Adjustment Rate			
Specification	<0.01%+250uA		
Short-circuit Current **U_0/R**			
Full Load Current **U_1/R**			
Calculation Result			
CC Linear Adjustment Rate			
Specification	<0.01%+250uA		
Output Current (Undervoltage) **U_0/R**			
Output Current (Overvoltage) **U_1/R**			
Calculation Result			
CC Ripple and Noise (Normal Mode)			
Specification	<2mArms	<500uArms	
Measurement Value			

CC Programming and Readback Accuracy			
Programming			
Specification	0.5mA	0.1mA	
Measurement Result (0A)			
Measurement Result (Rated Current)			
Readback			
Specification	0.5mA	0.1mA	
Measurement Result (0A)			
Measurement Result (Rated Current)			

Appendix B: Specifications

The following parameters can be guaranteed only when the instrument has been operating under the specified operation temperature for more than 30 minutes.

Note: unless otherwise noticed, all the specifications are applicable to the outputs of the three channels.

Model		DP1308A		
Channel		+6V	+25V	-25V
DC Output (0℃ to 40℃)				
Voltage		0 to +6V	0 to +25V	0 to -25V
Current		0 to 5A	0 to 1A	0 to 1A
Overvoltage Protection		0.1V to 6.5V	0.1V to 27V	-0.1V to -27V
Overcurrent Protection		0.1A to 5.5A	0.1A to 1.2A	0.1A to 1.2A
Load Adjustment Rate ± (output percentage + offset)				
Voltage		<0.01%+2mV		
Current		<0.01%+250μA		
Linear Adjustment Rate ± (output percentage + offset)				
Voltage		<0.01%+2mV		
Current		<0.01%+250μA		
Ripple and Noise (20 Hz to 20 MHz)				
Normal Mode Voltage		<350μVrms/2mVpp		
Normal Mode Current		<2mArms	<500μArms	
Common Mode Current		<1.5μArms		
Year Accuracy[1] (25℃±5℃) ± (output percentage + offset)				
Programming	Voltage	0.1%+5mV	0.05%+20mV	
	Current	0.2%+10mA	0.15%+4mA	
Readback	Voltage	0.1%+5mV	0.05%+10mV	
	Current	0.2%+10mA	0.15%+4mA	
Resolution				
Programming		0.5mV/0.5mA	1.5mV/0.1mA	
Readback		0.5mV/0.5mA	1.5mV/0.1mA	
Electric Meter		1mV/1mA	10mV/1mA	
Transient Response Time				

The time for the output voltage to recover to within 15mV following the current change from full load to half load or from half load to full load should be lower than 50μs.			
Command Processing Time[2]			
<50ms			
Temperature Coefficient per℃ (output percentage + offset)			
Voltage		0.01%+2mV	0.01%+3mV
Current		0.02%+3mA	0.01%+0.5mA
Stability[3]± (output percentage + offset)			
Voltage		0.03%+1mV	0.02%+2mV
Current		0.1%+3mA	0.05%+1mA
Voltage Program-control Time (1% of the variation range)			
Rise	Full Load	11ms	50ms
	No Load	10ms	45ms
Fall	Full Load	13ms	20ms
	No Load	200ms	400ms
OVP/OCP			
Accuracy ± (output percentage + offset)		0.5%+0.5V/0.5%+0.5A	
Activation Time		1.5ms (OVP≥ 3V) <10ms (OVP<3V and OCP)	
Mechanical			
Dimensions		235 mm (W) x 155 mm (H) x 384 mm (D)	
Weight		8.5 kg	
Power			
AC Input (50Hz to 60Hz)		100Vac±10%, 115Vac±10% 220Vac±10%, 230Vac±10% (maximum 250VAC)	
Environment			
Working Temperature		Full Rated Output: 0℃ to 40℃ Under relatively higher temperature: the linearity of the output current drops to 50% under maximum temperature 55℃	
Cooling Method		Fan	

Note[1]: The accuracy parameters are acquired via calibration under 25℃ after 1-hour warm-up.

Note[2]: The maximum time required for the output to change accordingly after receiving the APPLy and SOURce commands.

Note[3]: The variation of the output within 8 hours after 30-minute warm-up when the load circuit and environment temperature are constant.