RIGOL

Performance Verification Guide

DSA1000A/DSA1000 Series
Spectrum Analyzer

Apr. 2015

RIGOL Technologies, Inc.

Guaranty and Declaration

Copyright

© 2012 RIGOL Technologies, Inc. All Rights Reserved.

Trademark Information

RIGOL is a registered trademark of RIGOL Technologies, Inc.

Publication Number

PVD01105-1110

Notices

- **RIGOL** products are covered by P.R.C. and foreign patents, issued and pending.
- **RIGOL** reserves the right to modify or change parts of or all the specifications and pricing policies at company's sole decision.
- Information in this publication replaces all previously corresponding material.
- Information in this publication is subject to change without notice.
- **RIGOL** shall not be liable for either incidental or consequential losses in connection with the furnishing, use or performance of this manual as well as any information contained.
- Any part of this document is forbidden to be copied, photocopied or rearranged without prior written approval of **RIGOL**.

Product Certification

RIGOL guarantees this product conforms to the national and industrial standards in China as well as the ISO9001:2008 standard and the ISO14001:2004 standard. Other international standard conformance certification is in progress.

Contact Us

If you have any problem or requirement when using our products or this manual, please contact **RIGOL**.

E-mail:service@rigol.com
Websites: www.rigol.com

General Safety Summary

Please review the following safety precautions carefully before putting the instrument into operation so as to avoid any personal injury or damage to the instrument and any product connected to it. To prevent potential hazards, please use the instrument only specified by this manual.

Use Proper Power Cord.

Only the power cord designed for the instrument and authorized for use within the local country could be used.

Ground The Instrument.

The instrument is grounded through the Protective Earth lead of the power cord. To avoid electric shock, it is essential to connect the earth terminal of power cord to the Protective Earth terminal before any inputs or outputs.

Connect the Probe Correctly.

If a probe is used, do not connect the ground lead to high voltage since it has the isobaric electric potential as ground.

Observe All Terminal Ratings.

To avoid fire or shock hazard, observe all ratings and markers on the instrument and check your manual for more information about ratings before connecting.

Use Proper Overvoltage Protection.

Make sure that no overvoltage (such as that caused by a thunderstorm) can reach the product, or else the operator might expose to danger of electrical shock.

Do Not Operate Without Covers.

Do not operate the instrument with covers or panels removed.

Do Not Insert Anything into the Holes of Fan.

Do not insert anything into the holes of the fan to avoid damaging the instrument.

Use Proper Fuse.

Please use the specified fuses.

Avoid Circuit or Wire Exposure.

Do not touch exposed junctions and components when the unit is powered.

Do Not Operate With Suspected Failures.

If you suspect damage occurs to the instrument, have it inspected by **RIGOL** authorized personnel before further operations. Any maintenance, adjustment or replacement especially to circuits or accessories must be performed by **RIGOL** authorized personnel.

Keep Well Ventilation.

Inadequate ventilation may cause increasing of temperature or damages to the device. So please keep well ventilated and inspect the intake and fan regularly.

Do Not Operate in Wet Conditions.

In order to avoid short circuiting to the interior of the device or electric shock, please do not operate in a humid environment.

Do Not Operate in an Explosive Atmosphere.

In order to avoid damages to the device or personal injuries, it is important to operate the device away from an explosive atmosphere.

Keep Product Surfaces Clean and Dry.

To avoid the influence of dust and/or moisture in air, please keep the surface of device clean and dry.

Electrostatic Prevention.

Operate in an electrostatic discharge protective area environment to avoid damages induced by static discharges. Always ground both the internal and external conductors of the cable to release static before connecting.

Protect the RF Input Terminals of Instrument.

Do not bend or hit the devices (such as filter and attenuator) connected to the input terminals; otherwise, the weight exerted onto the instrument terminals might increase and the instrument might be damaged. Besides, the 50Ω and 75Ω connectors and cables cannot be used interchangeably.

Do Not Overload the Input.

To avoid damaging the instrument, the DC voltage component of the signal input into the RF input terminal cannot exceed 50V DC and the maximum continuous power of the AC (RF) signal component cannot exceed 30 dBm (1 W) when the frequency is from 10 MHz to 3 GHz.

Appropriate Use of Power Meter.

If you are not sure about the characteristics of the signal under test, follow these recommendations below to ensure safe operations of the spectrum analyzer. If RF power meter is available, use it to measure the signal level. If RF power meter is not available, add a rated external attenuator between the signal cable and input terminal of the spectrum analyzer; select maximum RF attenuation, maximum span and maximum possible reference level for the spectrum analyzer to display the signals within the screen.

Know About the Specification Conditions of the Instrument.

To ensure the performance specifications of the instrument, use the analyzer under specified conditions.

Proper Use of Battery.

If a battery is supplied, it must not be exposed to high temperature or in contact with fire. Keep it out of the reach of children. Improper change of battery (note: lithium battery) may cause explosion. Use **RIGOL** specified battery only.

Handling Safety.

Please handle with care during transportation to avoid damages to buttons, knob interfaces and other parts on the panels.

Safety Terms and Symbols

Terms Used in this Manual. These terms may appear in this manual:

WARNING
Warning statements indicate conditions or practices that could result in injury or loss of life.

CAUTION
Caution statements indicate conditions or practices that could result in damage to this product or other property.

Terms Used on the Product. These terms may appear on the product:

DANGER It calls attention to an operation, if not correctly performed, could result in injury or hazard immediately.

WARNING It calls attention to an operation, if not correctly performed, could result in potential injury or hazard.

CAUTION It calls attention to an operation, if not correctly performed, could result in damage to the product or other devices connected to the product.

Symbols Used on the Product. These symbols may appear on the product:

Hazardous Voltage

Safety Warning

Protective Earth Terminal

Chassis Ground

Test Ground

Allgemeine Sicherheits Informationen

Überprüfen Sie diefolgenden Sicherheitshinweise sorgfältigumPersonenschädenoderSchäden am Gerätundan damit verbundenen weiteren Gerätenzu vermeiden. Zur Vermeidung vonGefahren, nutzen Sie bitte das Gerät nur so, wiein diesem Handbuchangegeben.

Um Feuer oder Verletzungen zu vermeiden, verwenden Sie ein ordnungsgemäßes Netzkabel.

Verwenden Sie für dieses Gerät nur das für ihr Land zugelassene und genehmigte Netzkabel.

Erden des Gerätes.

Das Gerät ist durch den Schutzleiter im Netzkabel geerdet. Um Gefahren durch elektrischen Schlag zu vermeiden, ist es unerlässlich, die Erdung durchzuführen. Erst dann dürfen weitere Ein- oder Ausgänge verbunden werden.

Anschluss einesTastkopfes.

Die Erdungsklemmen der Sonden sindauf dem gleichen Spannungspegel des Instruments geerdet. SchließenSie die Erdungsklemmen an keine hohe Spannung an.

Beachten Sie alle Anschlüsse.

Zur Vermeidung von Feuer oder Stromschlag, beachten Sie alle Bemerkungen und Markierungen auf dem Instrument. Befolgen Sie die Bedienungsanleitung für weitere Informationen, bevor Sie weitere Anschlüsse an das Instrument legen.

Verwenden Sie einen geeigneten Überspannungsschutz.

Stellen Sie sicher, daß keinerlei Überspannung (wie z.B. durch Gewitter verursacht) das Gerät erreichen kann. Andernfallsbestehtfür den Anwender die GefahreinesStromschlages.

Nicht ohne Abdeckung einschalten.

Betreiben Sie das Gerät nicht mit entfernten Gehäuse-Abdeckungen.

Betreiben Sie das Gerät nicht geöffnet.

Der Betrieb mit offenen oder entfernten Gehäuseteilen ist nicht zulässig. Nichts in entsprechende Öffnungen stecken (Lüfter z.B.)

Passende Sicherung verwenden.

Setzen Sie nur die spezifikationsgemäßen Sicherungen ein.

Vermeiden Sie ungeschützte Verbindungen.

Berühren Sie keine unisolierten Verbindungen oder Baugruppen, während das Gerät in Betrieb ist.

Betreiben Sie das Gerät nicht im Fehlerfall.

Wenn Sie am Gerät einen Defekt vermuten, sorgen Sie dafür, bevor Sie das Gerät wieder betreiben, dass eine Untersuchung durch **RIGOL** autorisiertem Personal durchgeführt wird. Jedwede Wartung, Einstellarbeiten oder Austausch von Teilen am Gerät, sowie am Zubehör dürfen nur von **RIGOL** autorisiertem Personal durchgeführt werden.

Belüftung sicherstellen.

Unzureichende Belüftung kann zu Temperaturanstiegen und somit zu thermischen Schäden am Gerät führen. Stellen Sie deswegen die Belüftung sicher und kontrollieren regelmäßig Lüfter und Belüftungsöffnungen.

Nicht in feuchter Umgebung betreiben.

Zur Vermeidung von Kurzschluß im Geräteinneren und Stromschlag betreiben Sie das Gerät bitte niemals in feuchter Umgebung.

Nicht in explosiver Atmosphäre betreiben.

Zur Vermeidung von Personen- und Sachschäden ist es unumgänglich, das Gerät ausschließlich fernab jedweder explosiven Atmosphäre zu betreiben.

Geräteoberflächen sauber und trocken halten.

Um den Einfluß von Staub und Feuchtigkeit aus der Luft auszuschließen, halten Sie bitte die Geräteoberflächen sauber und trocken.

Schutz gegen elektrostatische Entladung (ESD).

Sorgen Sie für eine elektrostatisch geschützte Umgebung, um somit Schäden und Funktionsstörungen durch ESD zu vermeiden. Erden Sie vor dem Anschluß immer Innen- und Außenleiter der Verbindungsleitung, um statische Aufladung zu entladen.

Die richtige Verwendung desAkku.

Wenneine Batterieverwendet wird, vermeiden Sie hohe Temperaturen bzw. Feuer ausgesetzt werden. Bewahren Sie es außerhalbder Reichweitevon Kindern auf. UnsachgemäßeÄnderung derBatterie (Anmerkung: Lithium-Batterie) kann zu einer Explosion führen. VerwendenSie nur von **RIGOL** angegebenenAkkus.

Sicherer Transport.

Transportieren Sie das Gerät sorgfältig (Verpackung!), um Schäden an Bedienelementen, Anschlüssen und anderen Teilen zu vermeiden.

Sicherheits Begriffe und Symbole

Begriffe in diesem Guide. Diese Begriffe können in diesem Handbuch auftauchen:

WARNING
Die Kennzeichnung WARNING beschreibt Gefahrenquellen die leibliche Schäden oder den Tod von Personen zur Folge haben können.

CAUTION
Die Kennzeichnung Caution (Vorsicht) beschreibt Gefahrenquellen die Schäden am Gerät hervorrufen können.

Begriffe auf dem Produkt. Diese Bedingungen können auf dem Produkt erscheinen:

DANGER	weist auf eine Verletzung oder Gefährdung hin, die sofort geschehen kann.
WARNING	weist auf eine Verletzung oder Gefährdung hin, die möglicherweise nicht sofort geschehen.
CAUTION	weist auf eine Verletzung oder Gefährdung hin und bedeutet, dass eine mögliche Beschädigung des Instruments oder anderer Gegenstände auftreten kann.

Symbole auf dem Produkt. Diese Symbole können auf dem Produkt erscheinen:

Gefährliche Spannung	**Sicherheits-Hinweis**	**Schutz-erde**	**Gehäusemasse**	**Erde**

Document Overview

This manual guides users to correctly test the performance of **RIGOL** DSA1000A/DSA1000 series spectrum analyzer. For the operation method of the instrument, please refer to the corresponding User's Guide.

Main topics in this manual:

Chapter 1 Overview

This chapter introduces the preparations and precautions of the performance verification test.

Chapter 2 Performance Verification Test

This chapter introduces the limit, test devices, test method and procedures of each performance.

Appendix Test Record Form

In the appendix, a test record form is provided for recording the test results so as to determine whether each performance fulfills the requirement.

Format Conventions in this Manual:

Front Panel Key: denoted by "Text Box + Button Name (Bold)", for example, **System**.

Menu Softkey: denoted by "Character Shading + Menu Word (Bold)", for example, **Information**.

Operation Step: denoted by an arrow "→", for example, **System** → **Information**.

Contents

Guaranty and Declaration I

General Safety Summary II

Safety Terms and Symbols V

Allgemeine Sicherheits Informationen VI

Sicherheits Begriffe und Symbole VIII

Document Overview IX

Chapter 1 Overview 1-1

Test Preparations 1-1

Test Result Record 1-3

Specifications 1-3

Chapter 2 Performance Verification Test 2-1

Displayed Average Noise Level (DANL) Test 2-2

Specification 2-2

Test Device 2-2

Test Connection Diagram 2-3

Test Procedures 2-3

Test Record Form 2-4

Single-sideband Phase Noise Test 2-5

Specification 2-5

Test Devices 2-5

Test Connection Diagram 2-5

Test Procedures 2-5

Test Record Form 2-6

Absolute Amplitude Accuracy Test 2-7

Specification 2-7

Test Devices 2-7

Test Connection Diagram 2-7

Test Procedures 2-8

Test Record Form 2-8

Frequency Response Test 2-9

Specification 2-9

Test Devices 2-9

Test Connection Diagram 2-9

Test Procedures 2-10

Test Record Form 2-11

Second Harmonic Distortion Test 2-13

Specification 2-13

Test Devices 2-13
Test Connection Diagram 2-13
Test Procedures 2-13
Test Record Form 2-14
TOI Distortion Test 2-15
Specification 2-15
Test Devices 2-15
Test Connection Diagram 2-16
Test Procedures 2-16
Test Record Form 2-18
1 dB Gain Compression Test 2-19
Specification 2-19
Test Devices 2-19
Test Connection Diagram 2-20
Test Procedures 2-20
Test Record Form 2-21
Input Attenuation Error Test 2-22
Specification 2-22
Test Devices 2-22
Test Connection Diagram 2-22
Test Procedures 2-23
Test Record Form 2-24
10 MHz Reference Output Accuracy Test 2-26
Specification 2-26
Test Device 2-26
Test Connection Diagram 2-26
Test Procedures 2-26
Test Record Form 2-26

Appendix Test Record Form 1

Chapter 1 Overview

Test Preparations

Before the test, make the following preparations.

1. Warm the spectrum analyzer up for at least 30 minutes.
2. Make sure that the instrument is within the calibration period (the calibration period is 1 year) and perform self-calibration on the spectrum analyzer (press **System** → **Calibrate** → **Cal Now** and the spectrum analyzer performs self-calibration immediately using the internal calibration source).
3. The test devices required are as shown in the table below.

Table 1-1 The test devices required

Device	Specification	Qty.	Recommended
Signal Generators	Amplitude accuracy: ±0.6 dB Single-sideband phase noise: <-126 dBc/Hz	2	Agilent N5181A
Frequency Counter	Frequency range: 10 MHz ± 100 Hz Support single trigger and external reference input Gate time: ≥10 s Frequency resolution: 10 digits/s	1	Agilent 53181A
Power Meter	Compatible with Agilent E9304A power sensor dB relative mode Resolution: 0.001 dB Reference accuracy: ±1.2%	1	Agilent N1913A
Power Sensor	Frequency range: 9 kHz to 18 GHz Maximum SWR: 1.13 (9 kHz to 2 GHz) 1.19 (2 GHz to 14 GHz) 1.22 (14 GHz to 16 GHz) 1.26 (16 GHz to 18 GHz) Amplitude range: 1 nW to 100 mW (-60 dBm to +20 dBm)	1	Agilent E9304A
Power Divider	Frequency range: 9 kHz to 13.2 GHz Insert loss: 6 dB, rated Output track: <0.25 dB Equivalent output SWR: <1.22:1	1	Agilent 11667A
Low-pass Filter[1]	Cut-off Frequency: 1 GHz	1	--
Attenuator/Switch Driver	Compatible with Agilent 8494H and 8496H programmable step attenuator	1	Agilent 11713B

The test devices required (continue)

Device	Specification	Qty.	Recommended
Step Attenuator	Step: 1 dB Attenuation range: 0 dB to 11 dB Frequency range: 50 MHz ± 1 MHz Connector: N-type (female) Attenuation Repeatability: ±0.03 dB	1	Agilent 8494H
Step Attenuator	Step: 10 dB Attenuation range: 0 dB to 110 dB Frequency range: 50 MHz ± 1 MHz Connector: N-type (female) Attenuation Repeatability: ±0.03 dB	1	Agilent 8496H
Attenuator Interconnect Kit	Connect Agilent 8494H and Agilent 8496H	1	Agilent 11716A
50 Ω Load	Impedance: 50 Ω, rated Connector: N-type (male)	1	--
Power Meter Connecting Cable	Compatible with Agilent N1913A power meter and Agilent E9304A power sensor	1	--
Dual-N Cables	N-type (male) to N-type (male) cable	3	--
Dual-BNC Cable	BNC (male)-BNC (male) cable	1	--
N-SMA Cables	N-type (male) to SMA (male) cable	2	--

Note: [1] The connecting terminals of the low-pass filter used in this manual are two SMA female terminals. In the actual test, the type of the connecting terminals of the low-pass filter may differ; please select proper connecting cable and adaptor according to the actual type of the connecting terminals.

Test Result Record

Record and keep the test result of each test. In the Appendix of this manual, a test result record form which lists all the test items and their corresponding performance limits as well as spaces for users to record the test results, is provided.

Tip:

It is recommended that users photocopy the test record form before each test and record the test results in the copy so that the form can be used repeatedly.

Specifications

The specification of each test item is provided in chapter 2. For other specifications, refer to DSA1000A/DSA1000 User's Guide or DSA1000A/DSA1000 Data Sheet (can be downloaded from www.rigol.com).

Tip:

All the specifications are only valid when the instrument has been warmed up for more than 30 minutes.

Chapter 2 Performance Verification Test

This chapter introduces the performance verification test method and procedures of DSA1000A and DSA1000 series spectrum analyzer.

Note:

1) Make sure the spectrum analyzer has passed the self-calibration before executing the performance verification test.
2) Make sure that the instrument has been warmed up for at least 30 minutes before executing any of the following tests.
3) Press **Preset** to reset the instrument to the factory setting before or after executing any of the following tests.
4) For amplitude-related tests, perform self-calibration on the instrument (press **System** → **Calibrate** → **Cal Now**) before the test.
5) Definitions of “Typical Value” and “Nominal Value” for this product.
   - Typical Value: the performance specification of this product under specified conditions.
   - Nominal Value: the approximate quantity of the product during application.

Displayed Average Noise Level (DANL) Test

Specification

DANL		
DSA1030A		
0 dB Attenuation, RBW=10 Hz, VBW=1 Hz, RMS Average Detector, Trace Average≥50, Input Impedance = 50 Ω, Tracking Generator Off		
DANL (Preamplifier off)	100 kHz to 10 MHz	< -85 dBm – 3 × (f/1 MHz) dB, Typical: -125 dBm
	10 MHz to 2.5 GHz	< -127 dBm + 3 × (f/1 GHz) dB, Typical: -130 dBm
	2.5 GHz to 3 GHz	< -115 dBm
DANL (Preamplifier on)	100 kHz to 1 MHz	< -103 dBm
	1 MHz to 10 MHz	< -103 dBm – 3 × (f/1 GHz) dB, Typical: -143 dBm
	10 MHz to 2.5 GHz	< -145 dBm + 3 × (f/1 GHz) dB, Typical: -148 dBm
	2.5 GHz to 3 GHz	< -133 dBm
DSA1030		
0 dB Attenuation, RBW = 100 Hz, VBW = 1 Hz, RMS Average Detector, Trace Average ≥ 50		
DANL (Preamplifier off)	100 kHz to 10 MHz	< -75 dBm – 3 × (f/1MHz) dB, Typical: -115 dBm
	10 MHz to 2.5 GHz	< -117 dBm + 3 × (f/1 GHz) dB, Typical: -120 dBm
	2.5 GHz to 3 GHz	< -105 dBm
DANL (Preamplifier on)	100 kHz to 1 MHz	< -93 dBm
	1 MHz to 10 MHz	< -93 dBm – 3 × (f/1 GHz) dB, Typical: -133 dBm
	10 MHz to 2.5 GHz	< -135 dBm + 3 × (f/1 GHz) dB, Typical: -138 dBm
	2.5 GHz to 3 GHz	< -123 dBm

Test Device

1. 50 Ω Load × 1

Test Connection Diagram

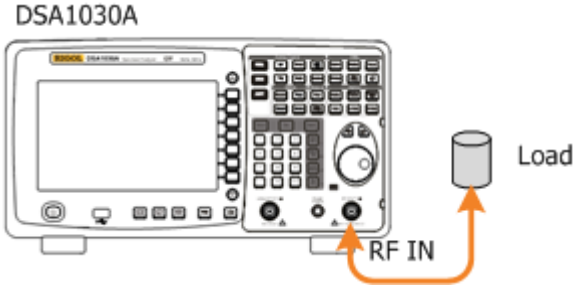

Figure 2-1 DANL Test Connection Diagram

Test Procedures

1. Connect the 50 Ω load to the RF input terminal of DSA1000A/DSA1000.

2. Configure the spectrum analyzer:
   a) Set the preamplifier to off.
   b) Set the span to 100 Hz.
   c) Set the trace type to power average (the number of averages ≥ 50).
   d) Set the input attenuation to 0 dB.
   e) Set the resolution bandwidth to 10 Hz (for DSA1030, set the resolution bandwidth to 100 Hz).
   f) Set the video bandwidth to 1 Hz.
   g) Set the reference level to -40 dBm.
   h) Set the sweep time to auto and the auto sweep time to accuracy.

3. Modify the center frequency of the spectrum analyzer according to the frequency parameters listed in the table below. Press **Single**, wait for the instrument to finish a sweep, perform maximum peak search and minimum peak search after the sweep is finished and record the results in the test record form each time the center frequency is modified.

   Table 2-1 Center Frequency Setting of DANL Test

Center Frequency					
103 kHz	1.04 MHz	50.04 MHz	504 MHz	1.904 GHz	2.494 GHz

4. Take the average of the maximum peak and minimum peak (add the two values and calculate the average) as the measurement result and compare it with the specification.

5. Keep other settings unchanged and enable the preamplifier of the spectrum analyzer; repeat step 3 and step 4 and record the test results.

Test Record Form

Center Frequency	Maximum Peak	Minimum Peak	Average [1]	Limit[2]	Pass/Fail	
Preamplifier off						
103 kHz				**100 kHz~10 MHz:**		
1.04 MHz						
50.04 MHz				**10 MHz~2.5 GHz:**		
504 MHz						
1.904 GHz				**2.5 GHz~3 GHz:**		
2.494 GHz						
Preamplifier on						
103 kHz				**100 kHz~1 MHz:**		
1.04 MHz						
50.04 MHz				**1 MHz~10 MHz:**		
504 MHz				**10 MHz~2.5 GHz:**		
1.904 GHz						
2.494 GHz				**2.5 GHz~3 GHz:**		

Note:

[1] Average = (Maximum Peak + Minimum Peak)/2 (dimensionless calculation)

[2] Fill in the corresponding specification according to your instrument.

Single-sideband Phase Noise Test

Specification

Single-sideband Phase Noise Test		
Offset	**DSA1030A**	**DSA1030**
10 kHz	< -88 dBc/Hz, typical	-80 dBc/Hz
100 kHz	< -100 dBc/Hz, typical	--
1 MHz	< -110 dBc/Hz, typical	--

Test Devices

1. Signal Generator × 1
2. Dual-N Cable × 1
3. Dual-BNC Cable × 1

Test Connection Diagram

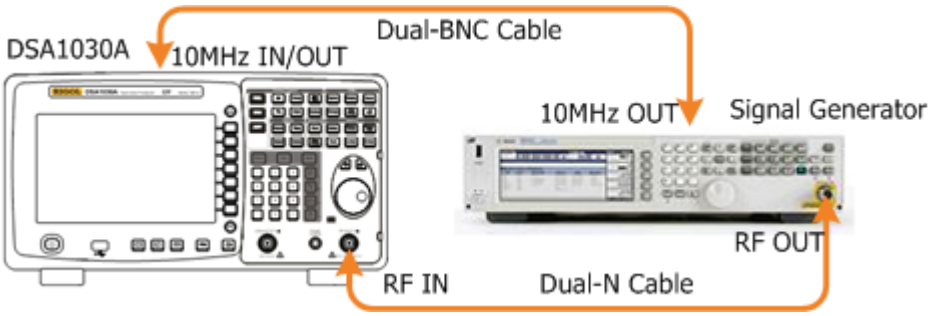

Figure 2-2 Single-sideband Phase Noise Test Connection Diagram

Test Procedures

1. Synchronize the spectrum analyzer and signal generator.

2. Connect the output terminal of the signal generator with the RF input terminal of the spectrum analyzer.

3. Set the signal generator to output a sine waveform with 500 MHz frequency and 0 dBm amplitude.

4. Configure the spectrum analyzer (take 10 kHz offset as an example):
   a) Select external reference source.
   b) Set the center frequency to 500 MHz.
   c) Configure the spectrum analyzer according to Table 2-2.
   d) Set the trace type to clear write.

e) Set the detector type to positive peak.
f) Set the sweep time to auto and the auto sweep time to accuracy.

Table 2-2 Spectrum Analyzer Configuration

Item	Offset 10 kHz	Offset 100 kHz	Offset 1 MHz
Span	50 kHz	250 kHz	5 MHz
VBW	10 Hz	30 Hz	1 kHz
Reference Level	0 dBm	0 dBm	0 dBm
Input Attenuation	10 dB	10 dB	10 dB
RBW	1 kHz	1 kHz	1 kHz

5. Press **Single**, wait for the instrument to finish a sweep and press **Peak** to find the maximum peak.

6. Set the cursor type to Delta, the detector type to sample detector and the number of sweeps to 4.

7. Press **Marker** → **Delta** → input 10 kHz. Press **Single** and wait for the instrument to finish the sweeps. Press **Marker Fctn**→ **Noise Mkr**. Read and record the current measurement result.

8. Compare the measurement result with the specification. Press **Preset** to restore the spectrum analyzer to its factory setting.

9. Repeat steps 4 to 8 (in step 7, press **Marker** → **Delta** →input the corresponding offset to be tested) to test the phase noise when the offset is 100 kHz/1 MHz.

Test Record Form

Signal Generator Output	Offset	Measurement Result	Limit[1]	Pass/Fail	
500 MHz	**Offset 10 KHz**		**Offset 10 kHz:**		
	Offset 100 KHz		**Offset 100 KHz:**		
	Offset 1 MHz		**Offset 1 MHz:**		

Note: [1] Fill in the corresponding specification according to your instrument.

Absolute Amplitude Accuracy Test

Specification

Absolute Amplitude Accuracy	
fc = 50 MHz, peak detector, preamplifier off, 10 dB attenuation, input signal = -10 dBm, 20℃ to 30℃	
Uncertainty	±0.4 dB

Test Devices

1. Signal Generator × 1
2. Power Meter × 1
3. Power Sensor × 1
4. Power Meter Connecting Cable × 1
5. Dual-N Cable × 1
6. Dual-BNC Cable × 1

Test Connection Diagram

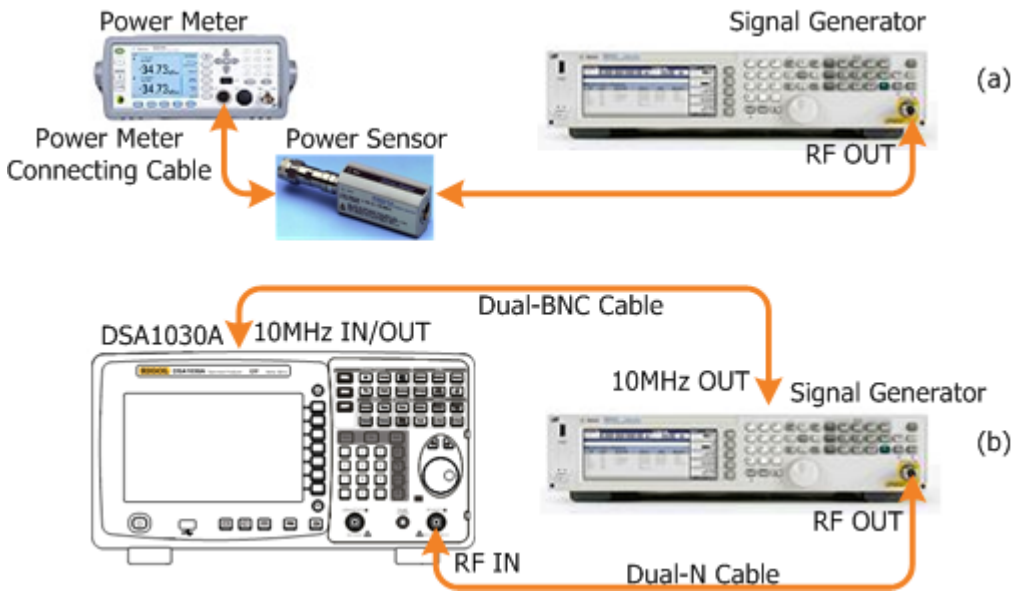

Figure 2-3 Absolute Amplitude Accuracy Test Connection Diagram

Test Procedures

1. Calibrate the power meter:
   a) Connect the power sensor with the **[REF]** terminal and channel A of the power meter. Press **Channel** and set the frequency of channel A to 50 MHz.
   b) Press **Cal** and enable **Power Ref** in the **Zero/Cal** menu. Press **Zero+Cal** and wait for the calibration to finish; then, observe whether the measurement value of the power meter is a 0 dBm, 50 MHz signal.
   c) Disable **Power Ref**.

2. Connect the output terminal of the signal generator with the power sensor, as shown in Figure 2-3 (a).

3. Set the signal generator to output a sine waveform with 50 MHz frequency and -10 dBm amplitude.

4. Measure the output amplitude of the signal generator using the power meter; read and record the measurement value **A1** of the power meter.

5. Disconnect the signal generator and the power meter. Connect the **[10MHz OUT]** terminal of the signal generator with the **[10MHz IN/OUT]** terminal at the rear panel of the spectrum analyzer using dual-BNC cable to synchronize the two instruments.

6. Connect the output terminal of the signal generator with the input terminal of the spectrum analyzer using dual-N cable as shown in Figure 2-3 (b).

7. Configure the spectrum analyzer:
   a) Select external reference source.
   b) Set the center frequency to 50 MHz.
   c) Set the span to 1 MHz.
   d) Set the reference level to 0 dBm.
   e) Set the input attenuation to 10 dB.
   f) Set the resolution bandwidth to 10 kHz.
   g) Set the sweep time to auto and the auto sweep time to accuracy.
   h) Press **Single** and wait for the instrument to finish a sweep; press **Peak** to find the maximum peak and record the result **A2**.

8. Absolute Amplitude Accuracy=**A1**－**A2** and compare it with the specification.

Test Record Form

Power Meter Measurement Value A1	Spectrum Analyzer Measurement Value A2	Calculation Result (A1－A2)	Limit	Pass/Fail
			±0.4 dB	

Frequency Response Test

Specification

Frequency Response 10 dB attenuation, relative to 50 MHz, 20 ℃ to 30 ℃	**DSA1030A**	**DSA1030**
100 kHz to 3 GHz (preamplifier off)	< 0.7 dB	< 1.0 dB
1 MHz to 3 GHz (preamplifier on)	< 1.0 dB	< 1.4 dB

Test Devices

1. Signal Generator × 1
2. Power Meter × 1
3. Power Sensor × 1
4. Power Meter Connecting Cable × 1
5. Dual-N Cable × 1
6. Dual-BNC Cable × 1

Test Connection Diagram

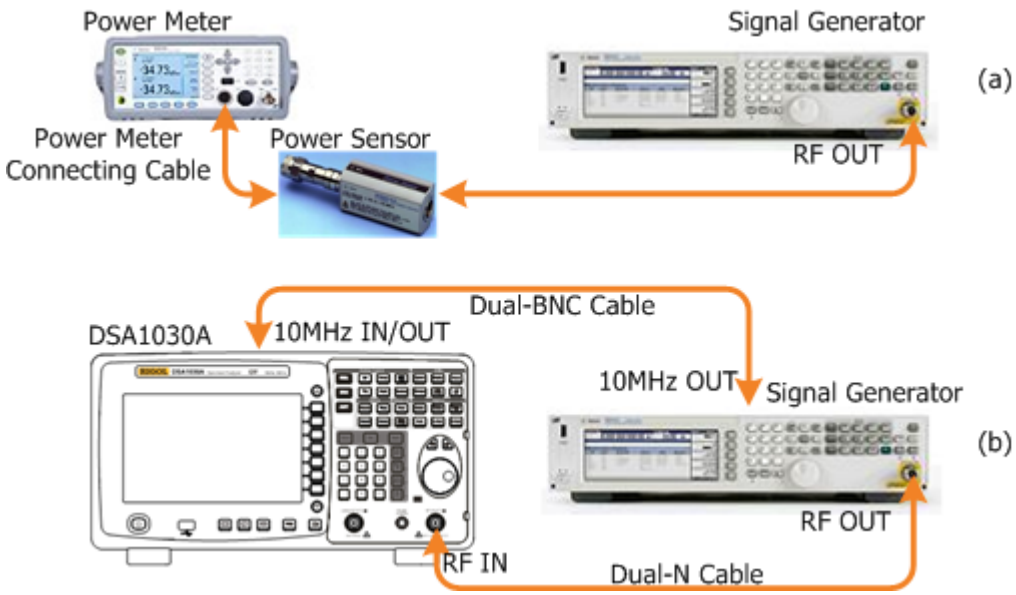

Figure 2-4 Frequency Response Test Connection Diagram

Test Procedures

1. Calibrate the power meter:
   a) Connect the power sensor with the **[REF]** terminal and channel A of the power meter. Press **Channel** and set the frequency of channel A to 50 MHz.
   b) Press **Cal** and enable **Power Ref** in the **Zero/Cal** menu. Press **Zero+Cal** and wait for the calibration to finish; then, observe whether the measurement value of the power meter is a 0 dBm, 50 MHz signal.
   c) Disable **Power Ref**.

2. Connect the output terminal of the signal generator with the power sensor, as shown in Figure 2-4 (a).

3. Set the output frequency of the signal generator to 50 MHz and the amplitude to -10 dBm.

4. Measure the output amplitude of the signal generator using the power meter and record the measurement result as **reference value 1**.

5. Modify the output frequency of the signal generator according to Table 2-3

   Table 2-3 Output frequency of the Signal Generator

Frequency	Amplitude	Frequency	Amplitude	Frequency	Amplitude
10 MHz		500 MHz		2.0 GHz	
50 MHz		1GHz		2.5 GHz	
100 MHz		1.5 GHz		2.999995 GHz	

6. Modify the frequency of the power meter accordingly, measure the amplitude **A1** and record the measurement result each time the output frequency of the signal generator is modified; subtract **reference value 1** from **A1** to calculate the **system error**.

7. Disconnect the signal generator and power sensor and synchronize the signal generator and spectrum analyzer.

8. Connect the output terminal of the signal generator with the RF input terminal of the spectrum analyzer using dual-N cable as shown in Figure 2-4 (b).

9. Set the output frequency of the signal generator to 50 MHz and the amplitude to -10 dBm.

10. Configure the spectrum analyzer:
    a) Select external reference source.
    b) Set the center frequency to 50 MHz.
    c) Set the span to 10 kHz.
    d) Set the reference level to 0 dBm.
    e) Set the input attenuation to 10 dB.

f) Set the resolution bandwidth to 1 kHz.
g) Set the sweep time to auto and the auto sweep time to accuracy.
h) Set the sweep mode to single.
i) Wait for the instrument to finish a sweep, press **Peak** to find the maximum peak, record the measurement result and take it as **reference value 2**.

11. Set the output frequency of the signal generator and the center frequency of the spectrum analyzer according to Table 2-3 (the center frequency of the spectrum analyzer corresponds to output frequency of the signal generator).

12. Each time the center frequency is changed, press **Single** and wait for the instrument to finish a sweep; then, press **Peak** to find the maximum peak and record the measurement result **A2**; subtract **reference value 2** from **A2** to calculate the **global error** and record the result.

13. **Frequency Response = |Global Error - System Error|** and compare the calculation result with the specification.

14. Press **Preset** to restore the spectrum analyzer to its factory setting. Enable the preamplifier of the spectrum analyzer; set the output amplitude of the signal generator to -30 dBm, repeat steps 4 to 13 (at this point, as the preamplifier is enabled, after executing e) in step 10, the reference level will change to -20 dBm automatically) and record the calculation result.

Test Record Form

Preamplifier off:

Reference Value 1				**Reference Value 2**			
Output Frequency of Signal Generator	**Power Meter Measure -ment Value A1**	**Spectrum Analyzer Measurement Value A2**	**System Error[1]**	**Global Error[2]**	**Frequency Response[3]**	**Limit**	**Pass /Fail**
10 MHz						**100 kHz to 3 GHz**: < 0.7 dB (DSA1030A) < 1.0 dB (DSA1030)	
50 MHz							
100 MHz							
500 MHz							
1 GHz							
1.5 GHz							
2.0 GHz							
2.5 GHz							
2.999995 GHz							

Preamplifier on:

Reference Value 1				Reference Value 2				
Output Frequency of Signal Generator	**Power Meter Measurement Value A1**	**Spectrum Analyzer Measurement Value A2**	**System Error[1]**	**Global Error [2]**	**Frequency Response [3]**	**Limit**	**Pass/ Fail**	
10 MHz						**1 MHz to 3 GHz:** < 1.0 dB (DSA1030A) < 1.4 dB (DSA1030)		
50 MHz								
100 MHz								
500 MHz								
1 GHz								
1.5 GHz								
2.0 GHz								
2.5 GHz								
2.999995 GHz								

Note:

[1] System Error = Power Meter Measurement Value A1 - Reference Value 1

[2] Global Error = Spectrum Analyzer Measurement Value A2 - Reference Value 2

[3] Frequency Response = |Global Error - System Error|

Second Harmonic Distortion Test

Specification

Model	DSA1030A	DSA1030
Specification	35 dBm	35 dBm

Test Devices

1. Signal Generator × 1
2. 1 GHz Low-pass Filter × 1
3. Dual-BNC Cable × 1
4. N-SMA Cable × 2

Test Connection Diagram

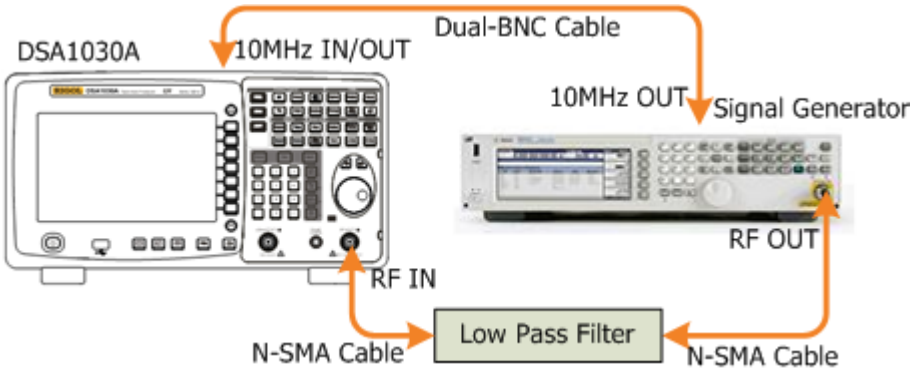

Figure 2-5 Second Harmonic Distortion Test Connection Diagram

Test Procedures

1. Synchronize the signal generator and spectrum analyzer. Connect the output terminal of the signal generator with the 1 GHz low-pass filter and connect the filter with the RF input terminal of the spectrum analyzer.

2. Set the output frequency of the signal generator to 1 GHz and the amplitude to -10 dBm.

3. Configure the spectrum analyzer:
   a) Set the center frequency to 1 GHz.
   b) Set the span to 10 kHz.
   c) Set the reference level to -10 dBm.
   d) Set the input attenuation to 10 dB.
   e) Set the resolution bandwidth to 30 Hz.
   f) Set the video bandwidth to 10 Hz.
   g) Set the sweep time to auto and the auto sweep time to accuracy.

4. Press **Single** and wait for the instrument to finish a sweep, press **Peak** to find the maximum peak. Then, set the cursor type to Delta. Set the center frequency to 2 GHz, press **Single** and wait for the instrument to finish a sweep, press **Peak** and record the delta result.

5. **Second Harmonic Distortion=-20 dBm - Delta** (-20 dBm is the level input into the mixer) and compare the calculation result with the specification.

Test Record Form

Output Frequency of Signal Generator	Delta	Calculation Result[1]	Limit	Pass/Fail
1 GHz			> 35 dBm	

Note: [1] Calculation Result = -20 dBm - Delta (-20 dBm is the level input into the mixer).

TOI Distortion Test

Specification

Model	DSA1030A	DSA1030
Specification (fc > 30 MHz)	7 dBm	7 dBm

Test Devices

1. Signal Generator × 2
2. Power Meter × 1
3. Power Sensor × 1
4. Power Meter Connecting Cable × 1
5. Power Divider × 1
6. 1 GHz Low-pass Filter ×1
7. Dual-N Cable × 2
8. N-SMA Cable × 2
9. Dual-BNC Cable × 1

Test Connection Diagram

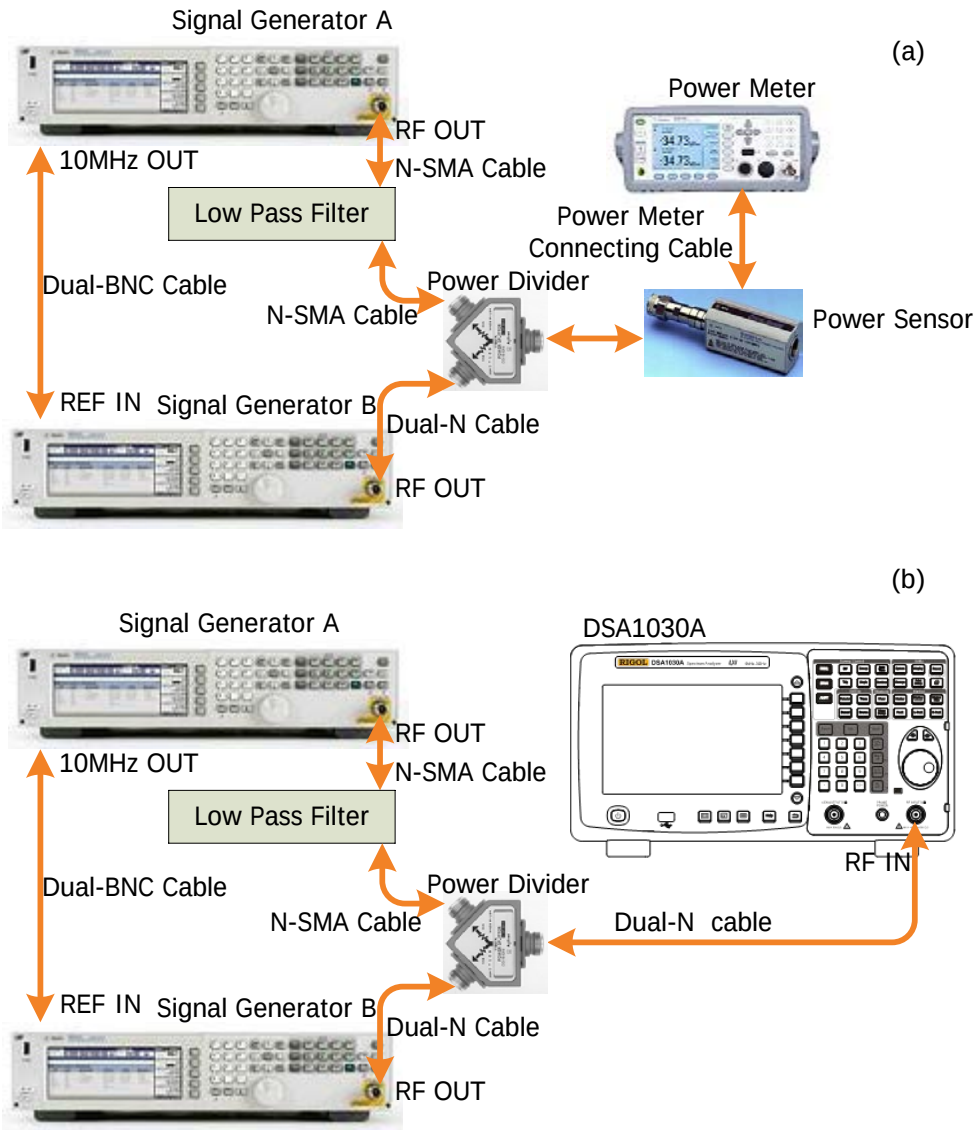

Figure 2-6 TOI Distortion Test Connection Diagram

Test Procedures

1. Calibrate the power meter:
   a) Connect the power sensor with the **[REF]** terminal and channel A of the power meter. Press **Channel** and set the frequency of channel A to 50 MHz.
   b) Press **Cal** and enable **Power Ref** in the **Zero/Cal** menu. Press **Zero+Cal** and wait for the calibration to finish; then, observe whether the measurement value of the power meter is a 0 dBm, 50 MHz signal.
   c) Disable **Power Ref**.

2. Synchronize the two signal generators.
   Set the output frequency of signal generator A to 1 GHz and the amplitude to -10 dBm.

Set the output frequency of signal generator B to 1.0002 GHz and the amplitude to -10 dBm.

3. Connect the output terminal of signal generator A with the power divider via the 1 GHz low-pass filter.

4. Connect the output terminal of signal generator B with the power divider and connect the power divider with the power sensor, as shown in Figure 2-6 (a).

5. Press **Channel** on the power meter and set the frequency of channel A to 1 GHz. Enable the output of signal generator A and disable the output of signal generator B. Observe the measurement value of the power meter. Adjust the output amplitude of signal generator A until the measurement value of the power meter becomes -10 dBm.

6. Press **Channel** on the power meter and set the frequency of channel A to 1.0002 GHz. Disable the output of signal generator A and enable the output of signal generator B. Observe the measurement value of the power meter. Adjust the output amplitude of signal generator B until the measurement value of the power meter becomes -10 dBm.

7. Enable the outputs of the two signal generators. Disconnect the power divider and power sensor and connect the power divider with spectrum analyzer, as shown in Figure 2-6 (b).

8. Configure the spectrum analyzer:
   a) Set the center frequency to 1 GHz.
   b) Set the span to 100 kHz.
   c) Set the CF step to 200 kHz.
   d) Set the maximum mixing level to -20 dBm.
   e) Set the reference level to 0 dBm and the input attenuation to 20 dB.
   f) Set the resolution bandwidth to 300 Hz and the video bandwidth to 300 Hz.
   g) Set the peak excursion to 3 dB.
   h) Set the sweep time to auto and the auto sweep time to accuracy.

9. Press **Single** and wait for the instrument to finish a sweep. Press **Peak** to find the maximum peak. Set the cursor type to Delta, reduce the center frequency by 200 kHz, press **Peak** and record the delta result.

10. **TOI Distortion = -20 dBm - Delta/2** and compare the calculation result with the specification.

11. Exchange the output frequencies of the two signal generators and set the center frequency of the spectrum analyzer to 1.0004 GHz. Press **Single** and wait for the instrument to finish a sweep; then, press **Peak** and record the delta result.

12. **TOI Distortion = -20 dBm - Delta/2** and compare the calculation result with the specification.

Test Record Form

Center Frequency	Delta	Calculation Result[1]	Limit	Pass/Fail	
999.8 MHz			> 7 dBm		
1.0004 GHz					

Note: [1] Calculation Result = -20 dBm - Delta/2 (-20 dBm is the level input into the mixer).

1 dB Gain Compression Test

Specification

Model	DSA1030A	DSA1030
Specification (preamplifier off, fc≥50 MHz)	> 0 dBm	> 0 dBm

Test Devices

1. Signal Generator × 2
2. Power Meter × 1
3. Power Sensor × 1
4. Power Meter Connecting Cable × 1
5. Power Divider × 1
6. Dual-N Cable × 3
7. Dual-BNC Cable × 1

Test Connection Diagram

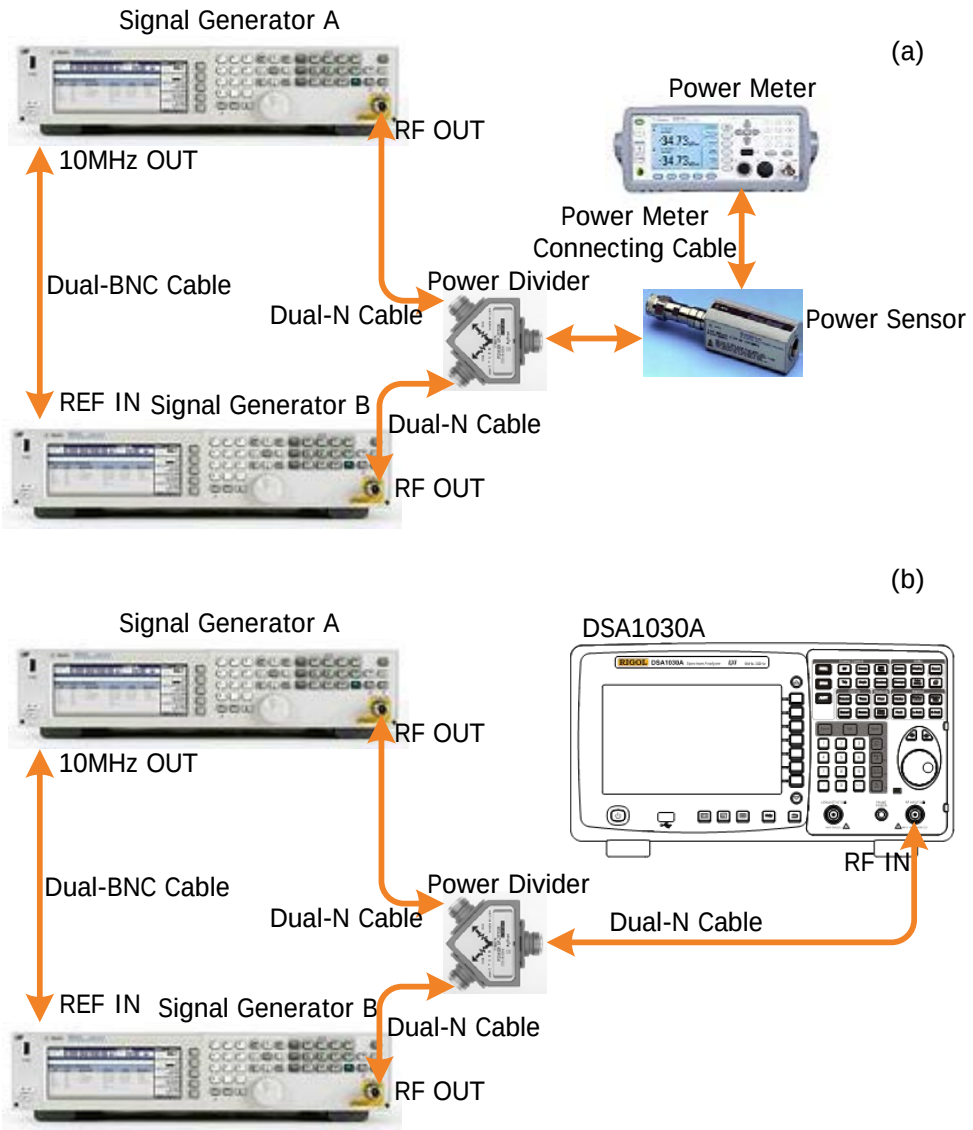

Figure 2-7 1 dB Gain Compression Test Connection Diagram

Test Procedures

1. Calibrate the power meter:
   a) Connect the power sensor with the **[REF]** terminal and channel A of the power meter. Press **Channel** and set the frequency of channel A to 50 MHz.
   b) Press **Cal** and enable **Power Ref** in the **Zero/Cal** menu. Press **Zero+Cal** and wait for the calibration to finish; then, observe whether the measurement value of the power meter is a 0 dBm, 50 MHz signal.
   c) Disable **Power Ref**.

2. Synchronize the two signal generators. Connect the outputs of the two signal generators using the power divider and connect the power divider with the power sensor, as shown in Figure 2-7 (a).

3. Set the signal generators:
   Set the output frequency of signal generator A to 50 MHz and the amplitude to -20 dBm.
   Set the output frequency of signal generator B to 53 MHz and the amplitude to 0 dBm.

4. Enable the output of signal generator A and disable the output of signal generator B. Observe the measurement value of the power meter. Adjust the output amplitude of signal generator A until the reading of the power meter becomes -20 dBm.

5. Press **Channel** on the power meter and set the frequency of channel A to 53 MHz.
   Disable the output of signal generator A and enable the output of signal generator B. Observe the measurement value of the power meter. Adjust the output amplitude of signal generator B until the reading of the power meter becomes 0 dBm.

6. Disconnect the power divider and power sensor and connect the power divider with spectrum analyzer, as shown in Figure 2-7 (b).

7. Enable the output of signal generator A and disable the output of signal generator B.

8. Configure the spectrum analyzer:
   a) Set the center frequency to 50 MHz.
   b) Set the span to 100 kHz.
   c) Set the reference level to -20 dBm.
   d) Set the input attenuation to 0 dB.
   e) Set the resolution bandwidth to 1 kHz.
   f) Set the sweep time to auto and the auto sweep time to accuracy.

9. Press **Single** and wait for the instrument to finish a sweep. Press **Peak** to measure the current peak and record the measurement result as **A1**.

10. Enable the outputs of the two signal generators. Press **Single** and wait for the instrument to finish a sweep. Press **Peak** to measure the peak at 50 MHz (**A2**).

11. **Delta = A1 - A2** and record the delta result.

Test Record Form

Output Amplitude of Signal Generator B	Measurement Result A1	Measurement Result A2	Calculation Result[1]	Limit	Pass/Fail
0 dBm				< 1 dBm	

Note: [1] Calculation Result = A1 - A2.

Input Attenuation Error Test

Specification

Input Attenuation Error		
fc = 50 MHz, peak detector, preamplifier off, relative to 10 dB attenuation, input signal = -10 dBm, 20℃ to 30℃		
Switch Uncertainty	**DSA1030A**	**DSA1030**
	< (0.3 + 0.01×attenuator setting) dB	< 0.8 dB

Test Devices

1. Signal Generator × 1
2. Power Meter × 1
3. Power Sensor × 1
4. Power Meter Connecting Cable × 1
5. Program-controlled Attenuators:
   Attenuator/Switch Driver × 1
   Step Attenuator (Step: 1 dB) × 1
   Step Attenuator (Step: 10 dB) × 1
   Attenuator Interconnect Kit × 1
6. Dual-N Cable × 2

Test Connection Diagram

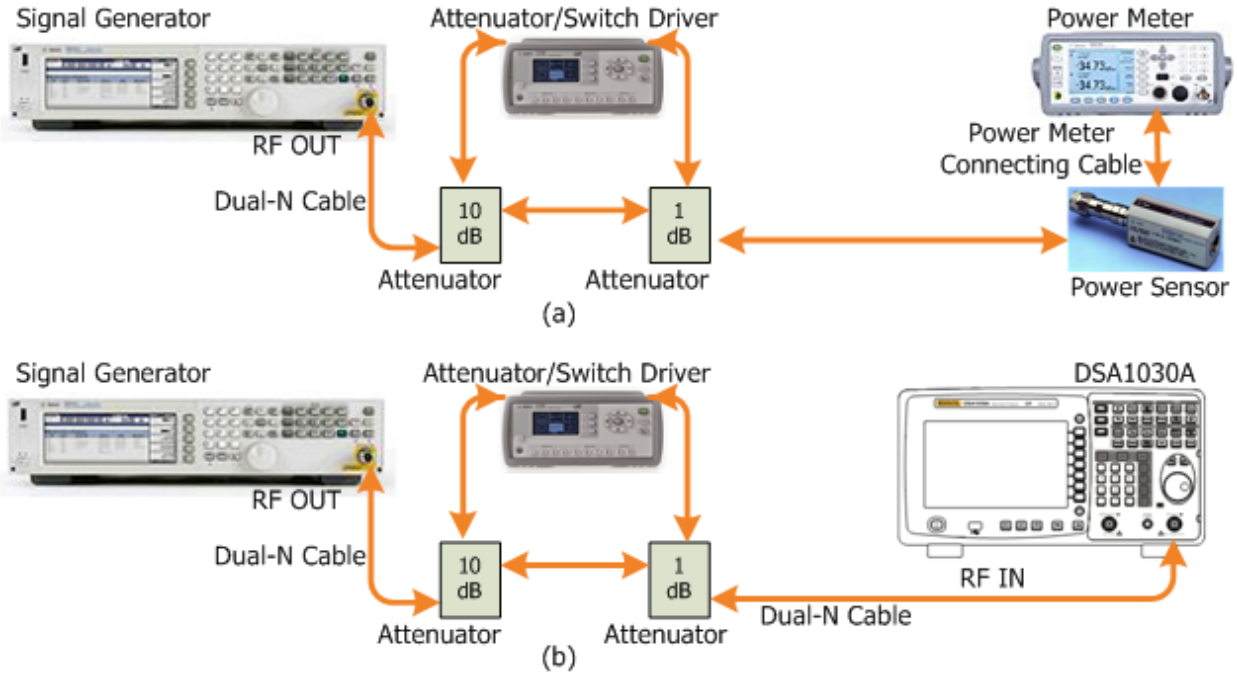

Figure 2-8 Input Attenuation Error Test Connection Diagram

Test Procedures

1. Calibrate the power meter:
   a) Connect the power sensor with the **[REF]** terminal and channel A of the power meter. Press **Channel** and set the frequency of channel A to 50 MHz.
   b) Press **Cal** and enable **Power Ref** in the **Zero/Cal** menu. Press **Zero+Cal** and wait for the calibration to finish; then, observe whether the measurement value of power meter is a 0 dBm, 50 MHz signal.
   c) Disable **Power Ref**.

2. Connect the output terminal of the signal generator with the program-controlled attenuator; then, connect the program-controlled attenuator with the power sensor, as shown in Figure 2-8 (a).

3. Set the output frequency of the signal generator to 50 MHz and the amplitude to +10 dBm.

4. Set the attenuation of the program-controlled attenuator to 40 dB and measure the amplitude using the power meter. **System Error Reference Value = Power Meter Measurement Value - (**+10 dBm - 40 dB**)** and record the calculation result in the test record form.

5. Modify the attenuation of the program-controlled attenuator according to the **Test Record Form** (keep other parameters unchanged). Each time the attenuation is modified, measure the amplitude using the power meter; **System Error = Power Meter Measurement Value - (+10 dBm - Attenuation of the Program-controlled Attenuator) - System Error Reference Value** and record the calculation result in the test record form.

6. Disconnect the program-controlled attenuator and the power sensor and connect the output of the program-controlled attenuator to the RF input terminal of the spectrum analyzer.

7. Set the attenuation of the program-controlled attenuator to 40 dB.

8. Configure the spectrum analyzer:
   a) Set the center frequency to 50 MHz.
   b) Set the span to 10 kHz.
   c) Set the reference level to -40 dBm.
   d) Set the input attenuation to 10 dB.
   e) Set the resolution bandwidth to 1 kHz and the video bandwidth to 10 Hz.
   f) Set the sweep time to auto and the auto sweep time to accuracy.

9. Press **Peak** to find the maximum peak. **Global Error Reference Value = Maximum Peak of the Spectrum Analyzer - (**+10 dBm - 40 dB**)** and record the calculation result in the test record form.

10. Set the attenuation of the program-controlled attenuator, the reference level of the spectrum

analyzer and the attenuation of the internal attenuator according to the **Test Record Form**. For each group of settings, press **Single**, wait for the instrument to finish a sweep and press **Peak** to find the maximum peak; **Global Error = Maximum Peak of the Spectrum Analyzer - (+10 dBm - Attenuation of the Program-controlled Attenuator) - Global Error Reference Value** and record the calculation result in the test record form.

11. **Uncertainty = |Global Error - System Error|** and compare the measurement results with the specification.

Test Record Form

System Error Reference Value								
Global Error Reference Value								
Reference Level	**Internal Attenuator**	**Program-controlled Attenuator**	**System Error[1]**	**Global Error[2]**	**Uncertainty [3]**	**Limit**	**Pass/Fail**	
-50 dBm	0 dB	50 dB				**DSA1030A:** < (0.3 + 0.01 × internal attenuator setting) dB **DSA1030:** < 0.8 dB		
-49 dBm	1 dB	49 dB						
-48 dBm	2 dB	48 dB						
-47 dBm	3 dB	47 dB						
-46 dBm	4 dB	46 dB						
-45 dBm	5 dB	45 dB						
-44 dBm	6 dB	44 dB						
-43 dBm	7 dB	43 dB						
-42 dBm	8 dB	42 dB						
-41 dBm	9 dB	41 dB						
-40 dBm	10 dB	40 dB						
-39 dBm	11 dB	39 dB						
-38 dBm	12 dB	38 dB						
-37 dBm	13 dB	37 dB						
-36 dBm	14 dB	36 dB						
-35 dBm	15 dB	35 dB						
-34 dBm	16 dB	34 dB						
-33 dBm	17 dB	33 dB						
-32 dBm	18 dB	32 dB						
-31 dBm	19 dB	31 dB						
-30 dBm	20 dB	30 dB						
-29 dBm	21 dB	29 dB						
-28 dBm	22 dB	28 dB						
-27 dBm	23 dB	27 dB						
-26 dBm	24 dB	26 dB						
-25 dBm	25 dB	25 dB						
-24 dBm	26 dB	24 dB						

Test Record Form (continue)

System Error Reference Value								
Global Error Reference Value								
Reference Level	**Internal Attenuator**	**Program-controlled Attenuator**	**System Error[1]**	**Global Error[2]**	**Uncertainty [3]**	**Limit**	**Pass/ Fail**	
-23 dBm	27 dB	23 dB				**DSA1030A:** < (0.3 + 0.01 × internal attenuator setting) dB **DSA1030:** < 0.8 dB		
-22 dBm	28 dB	22 dB						
-21 dBm	29 dB	21 dB						
-20 dBm	30 dB	20 dB						
-19 dBm	31 dB	19 dB						
-18 dBm	32 dB	18 dB						
-17 dBm	33 dB	17 dB						
-16 dBm	34 dB	16 dB						
-15 dBm	35 dB	15 dB						
-14 dBm	36 dB	14 dB						
-13 dBm	37 dB	13 dB						
-12 dBm	38 dB	12 dB						
-11 dBm	39 dB	11 dB						
-10 dBm	40 dB	10 dB						
-9 dBm	41 dB	9 dB						
-8 dBm	42 dB	8 dB						
-7 dBm	43 dB	7 dB						
-6 dBm	44 dB	6 dB						
-5 dBm	45 dB	5 dB						
-4 dBm	46 dB	4 dB						
-3 dBm	47 dB	3 dB						
-2 dBm	48 dB	2 dB						
-1 dBm	49 dB	1 dB						
0 dBm	50 dB	0 dB						

Note:

[1] System Error = Measurement Value of the Power Meter - (+10 dBm - Attenuation of the Program-controlled Attenuator) - System Error Reference Value

[2] Global Error = Maximum Peak of the Spectrum Analyzer - (+10 dBm - Attenuation of the Program-controlled Attenuator) - Global Error Reference Value

[3] Uncertainty = |Global Error - System Error|

10 MHz Reference Output Accuracy Test

Specification

10 MHz Reference Output Accuracy	
Specification	Aging rate[1] × time from last calibration till now[2] + temperature drift[3]

Note:

[1] Aging rate: < 3 ppm/year

[2] The instrument was calibrated before leaving factory.

[3] Temperature drift: < 3 ppm

Test Device

1. Frequency Counter × 1
2. Dual-BNC Cable × 1

Test Connection Diagram

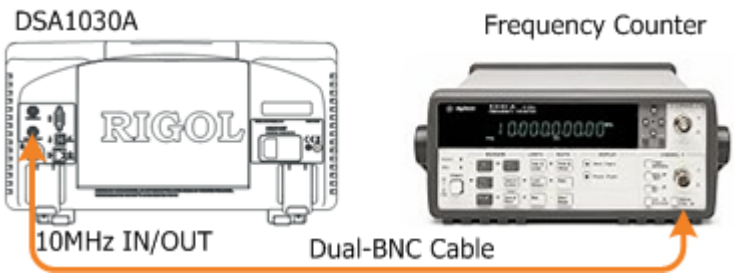

Figure 2-9 10 MHz Reference Output Accuracy Test Connection Diagram

Test Procedures

1. Connect the **[10 MHz IN/OUT]** terminal at the rear panel of the spectrum analyzer with the frequency counter.

2. Record the measurement result of the frequency counter and compare it with the specification.

Test Record Form

Frequency Counter Measurement Result	Output Accuracy[1]	Limit	Pass/Fail
		< 10 MHz*(3 ppm × time from the last calibration till now + 3 ppm)	

Note: [1] Output Accuracy = |Frequency Counter Measurement Result – 10 MHz|

Appendix Test Record Form

RIGOL DSA1000A/DSA1000 Series Spectrum Analyzer
Performance Verification Test Record Form

Model:_____ Tested By:_____ Test Date:_____

Displayed Average Noise Level (DANL) Test:

Center Frequency	Maximum Peak	Minimum Peak	Average [1]	Limit[2]	Pass/Fail	
Preamplifier off						
103 kHz				**100 kHz~10 MHz:**		
1.04 MHz						
50.04 MHz				**10 MHz~2.5 GHz:**		
504 MHz						
1.904 GHz				**2.5 GHz~3 GHz:**		
2.494 GHz						
Preamplifier on						
103 kHz				**100 kHz~1 MHz:**		
1.04 MHz						
50.04 MHz				**1 MHz~10 MHz:**		
504 MHz				**10 MHz~2.5 GHz:**		
1.904 GHz						
2.494 GHz				**2.5 GHz~3 GHz:**		

Note:

[1] Average = (Maximum Peak + Minimum Peak)/2 (dimensionless calculation)

[2] Fill in the corresponding specification according to your instrument.

Single-sideband Phase Noise Test:

Signal Generator Output	Offset	Measurement Result	Limit[1]	Pass/Fail	
500 MHz	**Offset 10 KHz**		**Offset 10 kHz:**		
	Offset 100 KHz		**Offset 100 KHz:**		
	Offset 1 MHz		**Offset 1 MHz:**		

Note: [1] Fill in the corresponding specification according to your instrument.

Absolute Amplitude Accuracy Test:

Power Meter Measurement Value A1	Spectrum Analyzer Measurement Value A2	Calculation Result (A1—A2)	Limit	Pass/ Fail
			±0.4 dB	

Frequency Response Test (preamplifier off):

Reference Value 1				Reference Value 2				
Output Frequency of Signal Generator	Power Meter Measure--ment Value A1	Spectrum Analyzer Measurement Value A2	System Error[1]	Global Error [2]	Frequency Response [3]	Limit	Pass/ Fail	
10 MHz						**100 kHz to 3 GHz**: < 0.7 dB (DSA1030A) < 1.0 dB (DSA1030)		
50 MHz								
100 MHz								
500 MHz								
1 GHz								
1.5 GHz								
2.0 GHz								
2.5 GHz								
2.999995 GHz								

Frequency Response Test (preamplifier on):

Reference Value 1				Reference Value 2				
Output Frequency of Signal Generator	Power Meter Measure--ment Value A1	Spectrum Analyzer Measurement Value A2	System Error[1]	Global Error [2]	Frequency Response [3]	Limit	Pass/ Fail	
10 MHz						**1 MHz to 3 GHz:** < 1.0 dB (DSA1030A) < 1.4 dB (DSA1030)		
50 MHz								
100 MHz								
500 MHz								
1 GHz								
1.5 GHz								
2.0 GHz								
2.5 GHz								
2.999995 GHz								

Note:

[1] System Error = Power Meter Measurement Value A1 - Reference Value 1

[2] Global Error = Spectrum Analyzer Measurement Value A2 - Reference Value 1

[3] Frequency Response = |Global Error - System Error|

Second Harmonic Distortion Test:

Output Frequency of Signal Generator	Delta	Calculation Result[1]	Limit	Pass/Fail
1 GHz			> 35 dBm	

Note: [1] Calculation Result = -20 dBm - Delta (-20 dBm is the level input into the mixer).

TOI Distortion Test:

Center Frequency	Delta	Calculation Result[1]	Limit	Pass/Fail	
999.8 MHz			> 7 dBm		
1.0004 GHz					

Note: [1] Calculation Result = -20 dBm - Delta/2 (-20 dBm is the level input into the mixer).

1 dB Gain Compression Test:

Output Amplitude of Signal Generator B	Measurement Result A1	Measurement Result A2	Calculation Result[1]	Limit	Pass/Fail
0 dBm				< 1 dBm	

Note: [1] Calculation Result = A1 - A2.

Input Attenuation Error Test:

System Error Reference Value								
Global Error Reference Value								
Reference Level	Internal Attenuator	Program-controlled Attenuator	System Error[1]	Global Error[2]	Uncertainty [3]	Limit	Pass /Fail	
-50 dBm	0 dB	50 dB				**DSA1030A:** < (0.3 + 0.01 × internal attenuator setting) dB **DSA1030:** < 0.8 dB		
-49 dBm	1 dB	49 dB						
-48 dBm	2 dB	48 dB						
-47 dBm	3 dB	47 dB						
-46 dBm	4 dB	46 dB						
-45 dBm	5 dB	45 dB						
-44 dBm	6 dB	44 dB						
-43 dBm	7 dB	43 dB						
-42 dBm	8 dB	42 dB						
-41 dBm	9 dB	41 dB						
-40 dBm	10 dB	40 dB						
-39 dBm	11 dB	39 dB						
-38 dBm	12 dB	38 dB						
-37 dBm	13 dB	37 dB						
-36 dBm	14 dB	36 dB						
-35 dBm	15 dB	35 dB						
-34 dBm	16 dB	34 dB						
-33 dBm	17 dB	33 dB						

(Continue) Input Attenuation Error Test:

Reference Level	Internal Attenuator	Programmable Attenuator	System Error[1]	Global Error[2]	Uncertainty [3]	Limit	Pass /Fail	
-32 dBm	18 dB	32 dB				**DSA1030A:** < (0.3 + 0.01 × internal attenuator setting) dB **DSA1030:** < 0.8 dB		
-31 dBm	19 dB	31 dB						
-30 dBm	20 dB	30 dB						
-29 dBm	21 dB	29 dB						
-28 dBm	22 dB	28 dB						
-27 dBm	23 dB	27 dB						
-26 dBm	24 dB	26 dB						
-25 dBm	25 dB	25 dB						
-24 dBm	26 dB	24 dB						
-23 dBm	27 dB	23 dB						
-22 dBm	28 dB	22 dB						
-21 dBm	29 dB	21 dB						
-20 dBm	30 dB	20 dB						
-19 dBm	31 dB	19 dB						
-18 dBm	32 dB	18 dB						
-17 dBm	33 dB	17 dB						
-16 dBm	34 dB	16 dB						
-15 dBm	35 dB	15 dB						
-14 dBm	36 dB	14 dB						
-13 dBm	37 dB	13 dB						
-12 dBm	38 dB	12 dB						
-11 dBm	39 dB	11 dB						
-10 dBm	40 dB	10 dB						
-9 dBm	41 dB	9 dB						
-8 dBm	42 dB	8 dB						
-7 dBm	43 dB	7 dB						
-6 dBm	44 dB	6 dB						
-5 dBm	45 dB	5 dB						
-4 dBm	46 dB	4 dB						
-3 dBm	47 dB	3 dB						
-2 dBm	48 dB	2 dB						
-1 dBm	49 dB	1 dB						
0 dBm	50 dB	0 dB						

Note:

[1] System Error = Measurement Value of the Power Meter - (+10 dBm - Attenuation of the Program-controlled Attenuator) - System Error Reference Value 1

[2] Global Error = Maximum Peak of the Spectrum Analyzer - (+10 dBm - Attenuation of the Program-controlled Attenuator) - Global Error Reference Value

[3] Uncertainty = |Global Error - System Error|

10 MHz Reference Output Accuracy Test:

Frequency Counter Measurement Result	Output Accuracy[1]	Limit	Pass/Fail
		< 10 MHz*(3 ppm × time from the last calibration till now + 3 ppm)	

Note: [1] Output Accuracy = |Frequency Counter Measurement Result – 10 MHz|